Self-Clinching Fasteners

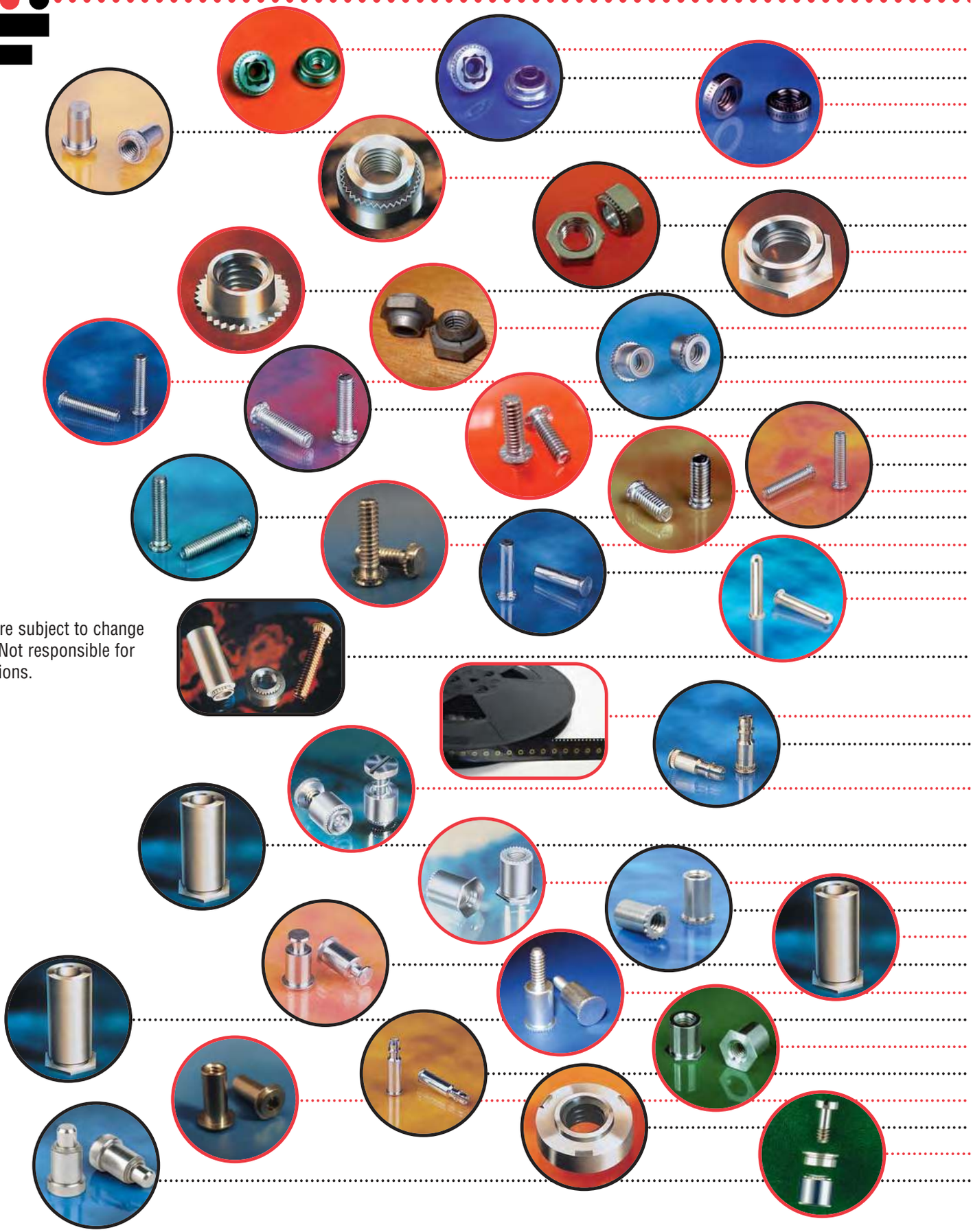

Specifications are subject to change without notice. Not responsible for errors or omissions.

Table of Contents

CAPTIVE FASTENER® SERIES	DESCRIPTION	PAGE
	About the Company / Product Description	4-8
CFAS, CFAC	Self-Clinching Floating Nuts	9-10
CFFS, CFFC	Self-Clinching Floating Locking Nuts	11-12
CFSP	Self-Clinching Nuts for Stainless Steel	13-14
CFB, CFBS	Blind Press Nuts	15-16
C / CS CFH, CFHN CA	Self-Clinching Steel and Stainless Steel Nuts Self-Clinching Steel Heavy Duty Nuts Self-Clinching Aluminum Nuts	17-21 22 23
CKN	Self-Clinching KAL-Nuts NEW	24
CFL	Self-Clinching Flush Nuts	25-26
CFE, CFEO CFEX, CFEOX	Miniature Self-Clinching Self-Locking Fasteners	27-28
CRT	Self-Clinching Self-Locking Nuts NEW	29-30
CPL, CPLC	Self-Clinching Top Collar Lock Nuts	31-32
CH, CHS, CHA	Self-Clinching Studs, Flush Head	33-35
HCH, HCHS, HCHB	Self-Clinching Studs, High Torque	36-37
HCW	Self-Clinching Studs, Wide Head NEW	38-39
TCH, TCHS	Self-Clinching Studs, Thin Sheet	40-41
CHE, CHES	Close-to-Edge Studs	42-44
CHTS	400 Series Stainless Steel Studs	45-47
CFA-1, CFA-2 / CFC-1, CFC-2	Self-Clinching Concealed Head Studs NEW	48-50
CH, CHN, CHS, CHA	Self-Clinching Pins	51-52
CGS	Self-Clinching Tapered Guide Pins	53
CKF2, CKFS2 CKFE, CKFSE CKFH CKFB3	Broaching Type Fasteners for Permanent Mounting in Non-Ductile Materials and Printed Circuit Boards	54-55 56 57 58
CRM	Reel Mounted Spacers and Nuts NEW	59
CFKSSB	Spring-Top Standoffs for PC Boards	60-61
CPFK LPH-0, 1, 2 CPFC2	PC Board Panel Fasteners Low-Profile Panel Fasteners Self-Clinching Panel Fastener Assemblies	62 63-64 65-66
CFSO, CFSOS, CFSOA CFBSO, CFBSOS, CFBSOA	Self-Clinching Standoffs	67-73
CFSOSG, CFSOAG	Self-Clinching Grounding Standoffs	74
CF40, CF40S	Miniature Self-Clinching Standoffs	75-76
CF4-S0, CF4-BS0	400 Series Stainless Steel Standoffs	77-79
CFSKC	Self-Clinching Slide-Top Standoffs	80-81
CFMS	Male Self-Clinching Standoffs NEW	82
CFSO, CFSOS, CFSOA	Unthreaded Thru-Hole Standoffs	83-84
CFT, CFTS, CFTA	Thin Head Standoffs	85-87
CFSSA, CFSSS, CFSSC	Spring-Top Standoffs	88-89
CFHS-1, CFHS-2	Self-Clinching Concealed Head Standoffs NEW	90-92
CFWN, CFWNS	Weld Nuts	93-94
CFS2, CFR2, CFN2	Panel Screw Components	95-98
CPN, CPR	Self-Clinching Spring-Loaded Plungers	99-100
	Recommended Installation Procedure/Reference Charts	101-105

"PEM" is a registered trademark of PennEngineering®

Finishes

Available finishes for self-clinching fasteners:

Finish	Chromate	Suffix	RoHs
Black Dry Film Lube	--------	ML	Yes
Black Nitrate	--------	BN	Yes
Black Oxide	--------	BO	Yes
Bright Acid Tin	--------	BT	Yes
Cadmium	Black	CB	No
Cadmium	Yellow	CC	No
Cadmium	Clear	CI	No
Cadmium	Dry Film Lube	EF	No
Copper Flash	--------	CF	Yes
Copper, Nickel, Tin	--------	CT	Yes
Dacromet 320	--------	DM	No
Electro Tin	--------	ET	Yes
Electro Tin (Matte Finish)	--------	MT	Yes
Geomet	--------	GM	Yes
LM1293	--------	LM	Yes
Nickel over Copper Flash	--------	NC	Yes
Nickel Plate	--------	NI	Yes
Nylon Locking Patch	--------	NP	Yes
Tin Lead	--------	TL	No
Zinc (*)	Clear	ZI	Yes
Zinc with Sealer (**)	Clear	ZS	Yes
Zinc (***)	Black	ZB	Yes
Zinc (***)	Blue	BZ	Yes
Zinc (***)	Green	ZG	Yes
Zinc (***)	Red	ZR	Yes
Zinc (***)	Yellow	ZC	Yes
None	--------	X	Yes

Other Finishes available upon request

Notes:

1. Unless otherwise specified self clinching fasteners will be provided with zinc/clear chromate (ZI).

2. P/N Structure example:
   C632-1 ZC → Finish

3. In accordance with ANSI B1.1(inch) and ANSI B1.13M(metric) specifications, the maximum major diameter and pitch diameter of class 2A/6g plated studs can be gauged to class 3A/4h.

* Zinc with clear trivalent chromate, 5µm thickness on all significant surfaces, withstands 12 hours salt spray to white corrosion. Reference applicable sections – ASTM B633, ASTMF1941, ASTMF1941M & ASTM B117.

** Zinc with clear trivalent chromate and sealer, 5µm thickness on all significant surfaces, withstands 72 hours salt spray to white corrosion. Reference applicable sections – ASTM B633, ASTMF1941, ASTMF1941M & ASTM B117.

*** Zinc with colored trivalent chromate, 5µm thickness on all significant surfaces, withstands 96 hours salt spray to white corrosion. Reference applicable sections – ASTM B633, ASTMF1941, ASTMF1941M & ASTM B117.

Captive Trade Mark Legend:

To assure you receive genuine Captive parts, look for the following trademarks:

△ - STUDS ⬡ - FLOATING NUT | | | | | | - CFSP NUTS CF - STEEL & STAINLESS NUTS (Cold Formed)

Locking Patch

The ND Patch coating process produces a completely dry product that is fused to the fastener and is ready to use right out of the box. ND Patch performs immediately upon assembly with no curing time required.

How ND Patch Works:

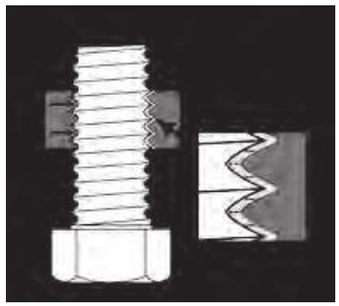

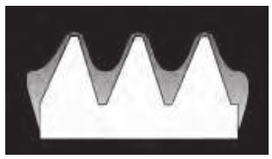

- When assembled with a mating part the resilient ND Patch is compressed. The compressed engineered plastic (typically a Nylon Patch) provides locking action in the thread instead of at the bearing surface due to its vibration dampening characteristics. In general, the resilience of ND Patch holds the fastener in place without adhesives or thread distortion. Due to its resilience, Patch can be repeatedly adjusted and reused.
- ND Patch is normally positioned one to three threads back from the end of the fastener to assure ease of starting. The normal coating length of the Patch is four to six threads. Special Patch location and coating length can be specified for specific applications.

Features:

Saves Time: Fasteners coated with ND Patch can be automatically fed through standard feeding devices.

Retains Full Strength: ND Patch process involves no drilling or milling, so there is no loss of the fastener's strength or hardness and any troublesome burrs or chips.

Saves Money: Use of ND Patch eliminates the need for costly lock washers, cotter pins, or castellated nuts. You get a close fit without the costs involved in obtaining close tolerances. Moreover, ND Patch is less expensive than applying bottled thread locking compounds at the point of assembly.

Resists Heat & Cold: ND Patch meets and exceeds IFI Specifications 124 & 524 as well as Military specification MIL-DTL-18240F, Type P, for temperatures from -70°F (-56°C) to +250°F (121°C).

Chemical Resistant: ND Patch will not dry, shrink, or lose resiliency when exposed to commercial solvents, alcohol, gasoline, oil, caustic soda, jet fuel, etc.

Reusable: Fasteners coated with ND Patch can be reused repeatedly without damage to threads. ND Patch is particularly resistant to deformation, which makes it ideal for repeated

Note: Minimum Order Quantities Apply.

ND Patch® is a registered trademark of ND Industries.

Thread Coating

ND LM-1293®

ND LM-1293 is an automotive approved process in which fasteners are accurately coated with one of a variety of thread masking and lubricating materials. The use of a Teflon® type material and a proprietary binder system in ND LM1293 makes it the ideal coating for many applications.

Description:

- ND LM-1293 can be applied to male or female, ferrous or non-ferrous threaded fasteners of virtually any finish. It is a cross-linked coating providing excellent solvent resistance, high temperature resistance, e-coat resistance (as specified under GM6076-M), resistance to weld spatter, and improvement to torque-tension properties.
- ND LM-1293 lubricates fastener threads to reduce driving friction, heat buildup, and thread galling in long rundowns while helping to ensure uniform clamp loading.
- To meet your specific application needs, ND LM-1293 employs a wide range of polymers, including fluorinated ethylene polymer (Teflon®-type) material.

Features:

Reliable Masking: ND LM-1293 prevents undesirable substances such as electro-deposited undercoating, weld spatter and some other materials from adhering to fastener threads.

Low Heat Process: Unlike competitive processes which often subject parts to extremely high temperatures that may damage or discolor the fastener, ND's unique patented process employs minimal heat.

Minimal Pre-cleaning Requirements: Unlike competitive processes that require parts be completely free of oil or other rust preventative coatings, only parts with excess oil or surface contaminants may require pre-cleaning for ND LM-1293 processing.

Increases Productivity: By providing additional lubricity, ND LM-1293 speeds assembly operations and increases productivity.

Eliminates Capping and Plugging: ND LM-1293 eliminates the need to cap male and plug female threads.

Note: Minimum Order Quantities Apply.

ND LM-1293® is a registered trademark of ND Industries.

Floating Clinch Nuts

Series CFAS & CFAC

CFAS & CFAC floating clinch nuts provide a self-clinching fastener with a floating nut that compensates for mating misalignments to .030 inches (.8 mm).

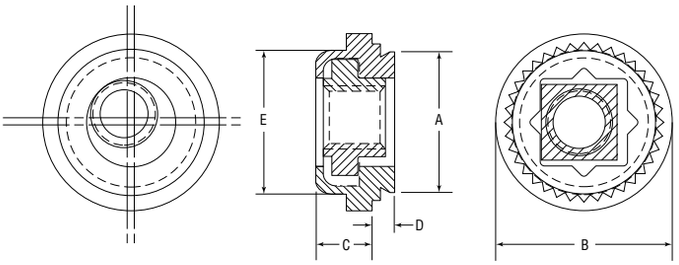

STARBURST® design indicates genuine Captive self-clinching Floating Nut.

Series	Material	Finish
CFAS	Heat-treated Carbon Steel	Zinc* Clear
CFAC	300 Series Stainless Steel	Passivated ASTM A380

*See Finish Spec. on Page 6.

Thread: Internal 2B, ANSI B1.1 (6H, ANSI/ASME B1.13M).

Float: .015 in. (.4mm) minimum in all directions from center, .030 in. (.8mm) total.

Use in: Materials with Rockwell Hardness of B-70 or less.

Dimensions & Specifications

	Thread Size	Part Number Carbon Steel	Part Number Stainless Steel	D Max.	Min.	+.003 in. (.08mm) -.000 (.00)	A Max.	E Max.	B ± .015 in. (± .4mm)	C Max.	Min.
INCH (in.)	#4-40	CFAS440-1	CFAC440-1	.038	.040	.290	.289	.290	.36	.13	.30
		CFAS440-2	CFAC440-2	.054	.056						
	#6-32	CFAS632-1	CFAC632-1	.038	.040	.328	.327	.335	.39	.13	.32
		CFAS632-2	CFAC632-2	.054	.056						
	#8-32	CFAS832-1	CFAC832-1	.038	.040	.368	.367	.365	.44	.13	.34
		CFAS832-2	CFAC832-2	.054	.056						
	#10-24	CFAS1024-1	CFAC1024-1	.038	.040	.406	.405	.405	.47	.16	.36
		CFAS1024-2	CFAC1024-2	.054	.056						
	#10-32	CFAS1032-1	CFAC1032-1	.038	.040						
		CFAS1032-2	CFAC1032-2	.054	.056						
	1/4-20	CFAS420-2†	CFAC420-2†	.054	.056	.515	.514	.510	.60	.21	.42
	1/4-28	CFAS428-2†	CFAC428-2†	.054	.056						
METRIC (mm)	M3 x 0.5	CFASM3-1	CFACM3-1	.97	1.0	7.37	7.35	7.37	9.1	3.3	7.6
		CFASM3-2	CFACM3-2	1.37	1.4						
	M4 x 0.7	CFASM4-1	CFACM4-1	.97	1.0	9.35	9.33	9.28	11.2	3.3	8.6
		CFASM4-2	CFACM4-2	1.37	1.4						
	M5 x 0.8	CFASM5-1	CFACM5-1	.97	1.0	10.31	10.29	10.29	11.9	4.3	9.0
		CFASM5-2	CFACM5-2	1.37	1.4						
	M6 x 1.0	CFASM6-2†	CFACM6-2†	1.37	1.4	13.08	13.06	12.96	15.3	5.3	11.0

†Not stocked, available on special order.

Floating Clinch Nuts

Series CFAS & CFAC

Continued from previous page

Installation & Performance Data

	Thread Size	Shank	Cold-rolled Steel			2024-T3 Aluminum			5052-H34 Aluminum		
			Installation Force (tons)	Pushout (lbs.)	Torque-out (in.-lbs.)	Installation Force (tons)	Pushout (lbs.)	Torque-out (in.-lbs.)	Installation Force (tons)	Pushout (lbs.)	Torque-out (in.-lbs.)
INCH (in.)	#4-40	-1	1 – 2	300	85	1 – 2	220	65	.5 – .75	215	65
		-2	1 – 2	300	150	1 – 2	225	150	1	225	80
	#6-32	-1	1 – 2	300	150	1 – 2	235	110	1	240	140
		-2	1 – 2	300	175	1 – 2	275	150	1	250	150
	#8-32	-1	1 – 2	300	150	1 – 2	240	110	1	250	140
		-2	1 – 2	400	200	1 – 2	300	150	1	265	150
	#10-24	-1	1	400	150	1 – 2	300	150	1	300	150
		-2	2	450	200	1 – 2	300	200	1	350	175
	#10-32	-1	1	400	150	1 – 2	300	150	1	300	150
		-2	2	450	200	1 – 2	300	200	1	350	175
	1/4-20 1/4-28	-2	2 – 3	500	325	2 – 3	300	325	1 – 2	400	325
	Thread Size	Shank	Installation Force (kN)	Pushout (N)	Torque-out (N•m)	Installation Force (kN)	Pushout (N)	Torque-out (N•m)	Installation Force (kN)	Pushout (N)	Torque-out (N•m)
METRIC (mm)	M3	-1	13	1330	9	13	970	7	7	950	7
		-2	13	1330	16	13	1000	17	9	1000	9
	M4	-1	13	1330	16	13	1050	12	9	1100	16
		-2	13	1775	22	13	1330	17	9	1178	17
	M5	-1	15	1775	16	15	1330	17	9	1330	17
		-2	15	2000	22	15	1330	22	9	1550	22
	M6	-2	22	2220	36	22	1330	36	13	1780	36

Floating Locking Clinch Nuts

Series CFFS & CFFC

CFFS & CFFC floating clinch nuts provide a self-clinching fastener with a floating nut that compensates for mating misalignments to .030 inches (.8 mm) and provides prevailing torque for the mating screw equivalent to MIL-N-25027 specifications.

Series	Material		Finish	
	Body	Nut	Body	Nut
CFFS	Heat-treated Carbon Steel	300 Series Stainless Steel	Zinc* Clear	Black Dry Film Lubricant** over Cadmium Chromate
CFFC	300 Series Stainless Steel	300 Series Stainless Steel	Passivated ASTM A380	Black Dry Film Lubricant** over Cadmium Chromate

*See Finish Spec. on Page 6.
** Spec. MIL-L-46010

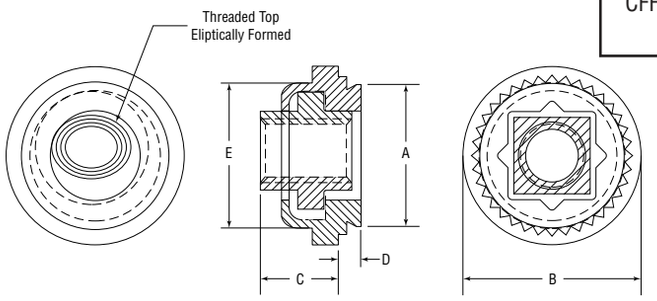

STARBURST® design indicates genuine Captive self-clinching Floating Nut.

Thread: Self Locking Internal 3B, ANSI B1.1 (6H, ANSI/ASME B1.13M).

Float: .015 in. (.4mm) minimum in all directions from center, .030 in. (.8mm) total.

Use in: Materials with Rockwell Hardness of B-70 or less.

Dimensions & Specifications

	Thread Size	Part Number Carbon Steel	Part Number Stainless Steel	D Max.	Min.	+.003 in. (.08mm) -.000 (.00)	A Max.	E Max.	B ± .015 in. (± .4mm)	C Max.	Min.
INCH (in.)	#4-40	CFFS440-1	CFFC440-1	.038	.040	.290	.289	.290	.36	.19	.30
		CFFS440-2	CFFC440-2	.054	.056						
	#6-32	CFFS632-1	CFFC632-1	.038	.040	.328	.327	.335	.39	.20	.32
		CFFS632-2	CFFC632-2	.054	.056						
	#8-32	CFFS832-1	CFFC832-1	.038	.040	.368	.367	.365	.44	.21	.34
		CFFS832-2	CFFC832-2	.054	.056						
	#10-24	CFFS1024-1	CFFC1024-1	.038	.040	.406	.405	.405	.47	.27	.36
		CFFS1024-2	CFFC1024-2	.054	.056						
	#10-32	CFFS1032-1	CFFC1032-1	.038	.040						
		CFFS1032-2	CFFC1032-2	.054	.056						
	1/4-20	CFFS420-2†	CFFC420-2†	.054	.056	.515	.514	.510	.60	.31	.42
	1/4-28	CFFS428-2†	CFFC428-2†	.054	.056						
METRIC (mm)	M3 x 0.5	CFFSM3-1	CFFCM3-1	.97	1.0	7.37	7.35	7.37	9.1	4.8	7.6
		CFFSM3-2	CFFCM3-2	1.37	1.4						
	M4 x 0.7	CFFSM4-1	CFFCM4-1	.97	1.0	9.35	9.33	9.28	11.2	5.3	8.6
		CFFSM4-2	CFFCM4-2	1.37	1.4						
	M5 x 0.8	CFFSM5-1	CFFCM5-1	.97	1.0	10.31	10.29	10.29	11.9	6.8	9.0
		CFFSM5-2	CFFCM5-2	1.37	1.4						
	M6 x 1.0	CFFSM6-2†	CFFCM6-2†	1.37	1.4	13.08	13.06	12.96	15.3	7.9	11.0

All items subject to minimum order requirements.
†Not stocked, available on special order.

Continued on next page.

Floating Locking Clinch Nuts

Series CFFS & CFFC

Continued from previous page.

Installation & Performance Data

	Thread Size	Shank	Cold-rolled Steel			2024-T3 Aluminum			5052-H34 Aluminum		
			Installation Force (tons)	Pushout (lbs.)	Torque-out (in.-lbs.)	Installation Force (tons)	Pushout (lbs.)	Torque-out (in.-lbs.)	Installation Force (tons)	Pushout (lbs.)	Torque-out (in.-lbs.)
INCH (in.)	#4-40	-1	1 – 2	300	85	1 – 2	220	65	.5 – .75	215	65
		-2	1 – 2	300	150	1 – 2	225	150	1	225	80
	#6-32	-1	1 – 2	300	150	1 – 2	235	110	1	240	140
		-2	1 – 2	300	175	1 – 2	275	150	1	250	150
	#8-32	-1	1 – 2	300	150	1 – 2	240	110	1	250	140
		-2	1 – 2	400	200	1 – 2	300	150	1	265	150
	#10-24	-1	1	400	150	1 – 2	300	150	1	300	150
		-2	2	450	200	1 – 2	300	200	1	350	175
	#10-32	-1	1	400	150	1 – 2	300	150	1	300	150
		-2	2	450	200	1 – 2	300	200	1	350	175
	1/4-20 1/4-28	-2	2 – 3	500	325	2 – 3	300	325	1 – 2	400	325
	Thread Size	Shank	Installation Force (kN)	Pushout (N)	Torque-out (N•m)	Installation Force (kN)	Pushout (N)	Torque-out (N•m)	Installation Force (kN)	Pushout (N)	Torque-out (N•m)
METRIC (mm)	M3	-1	13	1330	9	13	970	7	7	950	7
		-2	13	1330	16	13	1000	17	9	1000	9
	M4	-1	13	1330	16	13	1050	12	9	1100	16
		-2	13	1775	22	13	1330	17	9	1178	17
	M5	-1	15	1775	16	15	1330	17	9	1330	17
		-2	15	2000	22	15	1330	22	9	1550	19
	M6	-2	22	2220	36	22	1330	36	13	1780	36

Self-Clinching Nuts for Stainless Steel

Series CFSP

CFSP self-clinching nuts provide strong load-bearing threads in stainless sheet metal as thin as .030 inches (.8mm).

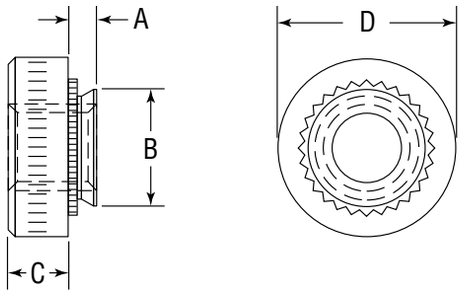

Series	Material	Finish
CFSP	Precipitation Hardened Stainless Steel	Passivated ASTM A380

Thread: Internal 2B, ANSI B1.1 (6H, ANSI/ASME B1.13M).

Use in: Materials with Rockwell Hardness of B-88 or less.

Dimensions & Specifications

	Thread Size	Part Number	A Max.	Min.	+.003 in. (.08 mm) –.000 (.00)	B Max.	C ± .01 in. (±.25mm)	D ± .01 in. (±.25mm)	Min.
INCH (in.)	#4-40	CFSP440-0	.030	.030-.039	.166	.165	.07	.25	.19
		CFSP440-1	.038	.040					
		CFSP440-2	.054	.056					
	#6-32	CFSP632-0	.030	.030-.039	.1875	.187	.07	.28	.22
		CFSP632-1	.038	.040					
		CFSP632-2	.054	.056					
	#8-32	CFSP832-0	.030	.030-.039	.213	.212	.09	.31	.27
		CFSP832-1	.038	.040					
		CFSP832-2	.054	.056					
	#10-32	CFSP1032-0	.030	.030-.039	.250	.249	.09	.34	.28
		CFSP1032-1	.038	.040					
		CFSP1032-2	.054	.056					
	1/4-20	CFSP420-1	.054	.056	.344	.343	.17	.44	.34
		CFSP420-2	.087	.091					
METRIC (mm)	M3 x 0.5	CFSPM3-0	.76	.8-1	4.22	4.2	1.5	6.3	4.8
		CFSPM3-1	.97	1.0					
		CFSPM3-2	1.37	1.4					
	M4 x 0.7	CFSPM4-0	.76	.8-1	5.41	5.38	2	7.9	6.9
		CFSPM4-1	.97	1.0					
		CFSPM4-2	1.37	1.4					
	M5 x 0.8	CFSPM5-0	.76	.8-1	6.35	6.33	2	8.7	7.1
		CFSPM5-1	.97	1.0					
		CFSPM5-2	1.37	1.4					
	M6 x 1.0	CFSPM6-1	1.37	1.4	8.75	8.73	4.1	11.1	8.6

Self-Clinching Nuts for Stainless Steel

Series CFSP

Continued from previous page.

Installation & Performance Data

	Thread Size	Shank Code	Installation Force (tons)	Pushout (lbs.)	Torque-out (in.-lbs.)
INCH (in.)	#4-40	-0	1.5 – 2.5	125	13
		-1		160	16
		-2		285	17
	#6-32	-0	2 – 3.5	135	17
		-1		165	23
		-2		335	27
	#8-32	-0	2 – 3.5	140	29
		-1		175	36
		-2		355	45
	#10-32	-0	3 – 4.5	175	34
		-1		225	44
		-2		390	59
	1/4-20	-1	4.5 – 5.5	445	146
		-2		700	170
	Thread Size	**Shank Code**	**Installation Force (kN)**	**Pushout (N)**	**Torque-out (N•m)**
METRIC (mm)	M3	-0	13 – 22	570	1.55
		-1		720	1.90
		-2		1285	2.00
	M4	-0	22 – 31	640	3.35
		-1		790	4.15
		-2		1595	5.05
	M5	-0	26 – 40	790	3.90
		-1		1020	5.05
		-2		1770	6.75
	M6	-1	40 – 48	1990	16.5

Blind Press Nuts

Series CFB & CFBS

CFB & CFBS blind, sealed-thread, press nuts are designed to provide extended thread lengths in thin sheet metal. Press nuts provide a seal against the entrance of dirts, oils, moisture, and corrosive atmospheres. They are usually more economical to use than nut and screw-type hardware that require elaborate seals and special assembly procedures.

Series	Material	Finish
CFB	Heat-treated Carbon Steel	Zinc* Clear
CFBS	300 Series Stainless Steel	Passivated ASTM A380

*See Finish Spec. on Page 6.

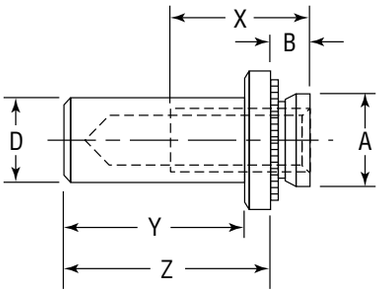

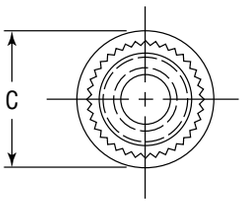

Thread: Internal 2B, ANSI B1.1 (6H, ANSI/ASME B1.13M).

Use In: CFB – Materials with HRB-80 or less.
CFBS – Materials with HRB-70 or less.

Dimensions & Specifications

	Thread Size	Part Number Carbon Steel	Part Number Stainless Steel	Barrel Dia. D Max.	Min.	+.003 in. (.08 mm) –.000 (.00)	Shank Dia. A Max.	Y Max.	B Max.	C ±.01 in. (±.25 mm)	Z ±.01 in. (±.25 mm)	Min.	X Depth Full Thread Min.
INCH (in.)	#4-40	CFB440-1	CFBS440-1	.149	.040	.166	.165	.335	.038	.25	.38	.19	.21
		CFB440-2	CFBS440-2		.056				.054				
	#6-32	CFB632-1	CFBS632-1	.169	.040	.187	.186	.335	.038	.28	.38	.22	.23
		CFB632-2	CFBS632-2		.056				.054				
	#8-32	CFB832-1	CFBS832-1	.204	.040	.213	.212	.385	.038	.31	.44	.27	.28
		CFB832-2	CFBS832-2		.056				.054				
	#10-32	CFB1032-1	CFBS1032-1	.235	.040	.250	.249	.385	.038	.34	.44	.28	.28
		CFB1032-2	CFBS1032-2		.056				.054				
	1/4-20	CFB420-1	CFBS420-1	.305	.056	.344	.343	.500	.054	.43	.56	.34	.31
		CFB420-2	CFBS420-2		.090				.087				
METRIC (mm)	M3 x 0.5	CFBM3-1	CFBSM3-1	3.8	1.0	4.25	4.22	8.5	.97	6.35	9.6	4.8	5.3
		CFBM3-2	CFBSM3-2		1.4				1.37				
	M4 x 0.7	CFBM4-1	CFBSM4-1	5.2	1.0	5.4	5.38	9.8	.97	7.95	11.2	6.9	7.1
		CFBM4-2	CFBSM4-2		1.4				1.37				
	M5 x 0.8	CFBM5-1	CFBSM5-1	6.0	1.0	6.4	6.38	9.8	.97	8.75	11.2	7.1	7.1
		CFBM5-2	CFBSM5-2		1.4				1.37				
	M6 x 1.0	CFBM6-1	CFBSM6-1	7.8	1.4	8.75	8.72	12.7	1.37	11.10	14.3	8.6	7.8
		CFBM6-2	CFBSM6-2		2.3				2.21				

Blind Press Nuts

Series CFB & CFBS

Continued from previous page.

Installation & Performance Data

	Thread Size	Shank Code	Min.	Cold-rolled Steel: Installation Force (lbs.)	Cold-rolled Steel: Pushout (lbs.)	Cold-rolled Steel: Torque-out (in.-lbs.)	5052-H34 Aluminum: Installation Force (lbs.)	5052-H34 Aluminum: Pushout (lbs.)	5052-H34 Aluminum: Torque-out (in.-lbs.)
INCH (in.)	#4-40	1	.040	2500	120	12	1600	95	11
		2	.056	3500	225	17	2000	165	12
	#6-32	1	.040	3000	125	17	1800	100	16
		2	.056	4000	255	27	2800	185	21
	#8-32	1	.040	3500	130	29	2000	105	24
		2	.036	5000	280	44	3000	215	34
	#10-32	1	.040	4000	135	34	2100	105	33
		2	.056	5000	315	59	3500	265	49
	1/4-20	1	.040	6000	390	104	4000	310	90
		2	.090						

	Thread Size	Shank Code	Min.	Cold-rolled Steel: Installation Force (kN)	Cold-rolled Steel: Pushout (N)	Cold-rolled Steel: Torque-out (N•m)	5052-H34 Aluminum: Installation Force (kN)	5052-H34 Aluminum: Pushout (N)	5052-H34 Aluminum: Torque-out (N•m)
METRIC (mm)	M3	1	1	10	555	1.36	7.1	435	1.24
		2	1.4	13	1000	1.92	9	745	1.36
	M4	1	1	15	595	1.92	8.9	485	1.81
		2	1.4	19	1245	3.05	12.5	965	2.37
	M5	1	1	17	615	3.28	9.3	485	2.71
		2	1.4	24	1405	4.97	14	1185	3.84
	M6	1	1.4	25	1775	11.75	17.8	1395	10.17
		2	2.3						

Self-Clinching Nuts

Series C & CS

C & CS nuts provide strong load-bearing threads in sheet metal and other thin section assemblies. Some C & CS nuts meet specification features of NASM45938/1.

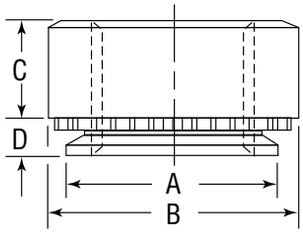

Series	Material	Finish
C	Heat-treated Carbon Steel	Zinc* Clear
CS	300 Series Stainless Steel	Passivated ASTM A380

*See Finish Spec. on Page 6.

Thread: Internal 2B, ANSI B1.1 (6H, ANSI/ASME B1.13M).

Use In: C – Materials with HRB-80 or less.
CS – Materials with HRB-70 or less.

Dimensions & Specifications

	Thread Size	Part Number: Carbon Steel	Part Number: Stainless Steel	D Max.	Min.	+.003 in. –.000	A Max.	B ± .01 in.	C ± .01 in.	Min.
INCH (in.)	#2-56	C256-0	CS256-0	.030	.030	.166	.165	.250	.070	.19
		C256-1	CS256-1	.038	.040					
		C256-2	CS256-2	.054	.056					
		C256-3	CS256-3	.087	.091					
	#3-48	C348-0	CS348-0	.030	.030	.166	.165	.250	.070	.19
		C348-1	CS348-1	.038	.040					
		C348-2	CS348-2	.054	.056					
		C348-3	CS348-3	.087	.091					
	#4-40	C440-0	CS440-0	.030	.030	.166	.165	.250	.070	.19
		C440-1	CS440-1	.038	.040					
		C440-2	CS440-2	.054	.056					
		C440-3	CS440-3	.087	.091					
	#6-32	C632-0	CS632-0	.030	.030	.1875	.187	.281	.070	.22
		C632-1	CS632-1	.038	.040					
		C632-2	CS632-2	.054	.056					
		C632-3	CS632-3	.087	.091					
	#8-32	C832-0	CS832-0	.030	.030	.213	.212	.312	.090	.27
		C832-1	CS832-1	.038	.040					
		C832-2	CS832-2	.054	.056					
		C832-3	CS832-3	.087	.091					

Self-Clinching Nuts

Series C & CS

Continued from previous page.

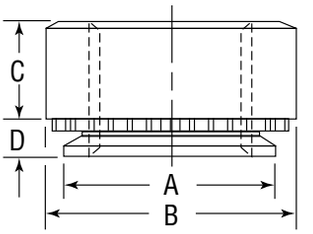

Dimensions & Specifications

	Thread Size	Part Number: Carbon Steel	Part Number: Stainless Steel	D Max.	Min.	+.003 in. −.000	A Max.	B ± .01 in.	C ± .01 in.	Min.
INCH (in.)	#10-24	C1024-0	CS1024-0	.030	.030	.250	.249	.344	.090	.28
		C1024-1	CS1024-1	.038	.040					
		C1024-2	CS1024-2	.054	.056					
		C1024-3	CS1024-3	.087	.091					
	#10-32	C1032-0	CS1032-0	.030	.030	.250	.249	.344	.090	.28
		C1032-1	CS1032-1	.038	.040					
		C1032-2	CS1032-2	.054	.056					
		C1032-3	CS1032-3	.087	.091					
	#12-24	C1224-1	CS1224-1	.038	.040	.277	.276	.380	.130	.31
		C1224-2	CS1224-2	.054	.056					
		C1224-3	CS1224-3	.087	.091					
	1/4-20	C420-0	CS420-0	.045	.047	.344	.343	.440	.170	.34
		C420-1	CS420-1	.054	.056					
		C420-2	CS420-2	.087	.091					
		C420-3	CS420-3	.120	.125					
	1/4-28	C428-1	CS428-1	.054	.056	.344	.343	.437	.170	.34
		C428-2	CS428-2	.087	.091					
		C428-3	CS428-3	.120	.125					
	5/16-18	C518-1	CS518-1	.054	.056	.413	.412	.500	.230	.38
		C518-2	CS518-2	.087	.091					
		C518-3	CS518-3	.120	.125					
	5/16-24	C524-1	CS524-1	.054	.056	.413	.412	.500	.230	.38
		C524-2	CS524-2	.087	.091					
		C524-3	CS524-3	.120	.125					
	3/8-16	C616-1	CS616-1	.087	.091	.500	.499	.562	.270	.44
		C616-2	CS616-2	.120	.125					
		C616-3	CS616-3	.235	.250					
	3/8-24	C624-1	CS624-1	.087	.091	.500	.499	.562	.270	.44
		C624-2	CS624-2	.120	.125					
		C624-3	CS624-3	.235	.250					
	1/2-13	C813-1	CS813-1	.120	.125	.656	.655	.810	.360	.63
		C813-2	CS813-2	.235	.250					

Self-Clinching Nuts

Series C & CS

Continued from previous page.

Dimensions & Specifications

	Thread Size	Part Number: Carbon Steel	Part Number: Stainless Steel	D Max.	Min.	+.08 mm −.00	A Max.	B ± .25 mm	C ± .25 mm	Min.
METRIC (mm)	M2 x 0.4	CM2-0	CSM2-0	.76	.8	4.22	4.20	6.3	1.5	4.8
		CM2-1	CSM2-1	.97	1.0					
		CM2-2	CSM2-2	1.37	1.4					
		CM2-3	CSM2-3	2.21	2.3					
	M2.5 x 0.45	CM2.5-0	CSM2.5-0	.76	.8	4.22	4.20	6.3	1.5	4.8
		CM2.5-1	CSM2.5-1	.97	1.0					
		CM2.5-2	CSM2.5-2	1.37	1.4					
		CM2.5-3	CSM2.5-3	2.21	2.3					
	M3 x 0.5	CM3-0	CSM3-0	.76	.8	4.22	4.20	6.3	1.5	4.8
		CM3-1	CSM3-1	.97	1.0					
		CM3-2	CSM3-2	1.37	1.4					
		CM3-3	CSM3-3	2.21	2.3					
	M3.5 x 0.6	CM3.5-0	CSM3.5-0	.76	.8	4.75	4.73	7.1	1.5	5.6
		CM3.5-1	CSM3.5-1	.97	1.0					
		CM3.5-2	CSM3.5-2	1.37	1.4					
		CM3.5-3	CSM3.5-3	2.21	2.3					
	M4 x 0.7	CM4-0	CSM4-0	.76	.8	5.41	5.38	7.9	2.0	6.9
		CM4-1	CSM4-1	.97	1.0					
		CM4-2	CSM4-2	1.37	1.4					
		CM4-3	CSM4-3	2.21	2.3					
	M5 x 0.8	CM5-0	CSM5-0	.76	.8	6.35	6.33	8.7	2.0	7.1
		CM5-1	CSM5-1	.97	1.0					
		CM5-2	CSM5-2	1.37	1.4					
		CM5-3	CSM5-3	2.21	2.3					
	M6 x 1.0	CM6-0	CSM6-0	1.15	1.2	8.75	8.73	11.05	4.08	8.6
		CM6-1	CSM6-1	1.37	1.4					
		CM6-2	CSM6-2	2.21	2.3					
		CM6-3†	CSM6-3	3.05	3.2					
	M8 x 1.25	CM8-1	CSM8-1	1.37	1.4	10.5	10.47	12.65	5.47	9.7
		CM8-2	CSM8-2	2.21	2.3					
		CM8-3†	CSM8-3	3.05	3.2					
	M10 x 1.5	CM10-1	CSM10-1	2.21	2.3	14.0	13.97	17.35	7.48	13.5
		CM10-2	CSM10-2	3.05	3.2					
		CM10-3†	CSM10-3†	6.00	6.4					
	M12 x 1.75	CM12-1†	CSM12-1†	3.05	3.2	17.0	16.95	20.55	8.5	16
		CM12-2†	CSM12-2†	6.00	6.4					

†Not stocked, available upon special order.

Continued on next page.

Self-Clinching Nuts

Series C & CS

Continued from previous page.

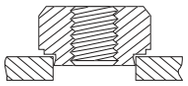

Fastener Must Be Installed Squarely In Hole

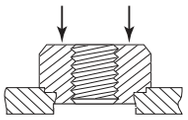

Squeezing Force Is Applied To Head Of Fastener

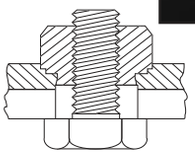

Install Bolt Or Screw From Opposite Side Of Head Of Fastener

Installation & Performance Data

	Thread Size	Shank Code	Cold-rolled Steel: Installation Force (tons)	Cold-rolled Steel: Pushout (lbs.)	Cold-rolled Steel: Torque-out (in.-lbs.)	5052-H34 Aluminum: Installation Force (tons)	5052-H34 Aluminum: Pushout (lbs.)	5052-H34 Aluminum: Torque-out (in.-lbs.)
INCH (in.)	#2-56 #3-48 #4-40	-0	1 – 2	100	13	0.5 – 1	60	8
		-1		120	14		89	9.5
		-2		225	17		169	12
		-3		225	18		169	12
	#6-32	-0	1.5 – 3	105	15	1 – 2	60	16
		-1		125	19		90	17
		-2		270	27		185	21
		-3		270	27		185	21
	#8-32	-0	2 – 3	105	25	1 – 2	65	21
		-1		140	34		100	23
		-2		280	44		215	32
		-3		280	44		215	32
	#10-24 #10-32	-0	2 – 3.5	115	31	1 – 2	65	25
		-1		175	39		105	31
		-2		245	59		245	49
		-3		315	59		245	49
	#12-24	-1	3 – 4	195	73	2 – 3.25	115	62
		-2		345	79		280	69
		-3		345	79		280	69
	1/4-20 1/4-28	-0	3 – 4	310	110	2 – 3.5	215	65
		-1						85
		-2-3		395	145		355	120
	5/16-18 5/16-24	-1	3 – 4	420	160	2 – 3.5	375	115
		-2-3		420	175		375	155
	3/8-16 3/8-24	-1-2-3	3.5 – 5.5	455	315	2.5 – 4	395	265
	1/2-13	-1-2	5 – 7.5	1040	730	7 – 9	470	345

Self-Clinching Nuts

Series C & CS

Continued from previous page.

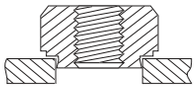

Fastener Must Be Installed Squarely In Hole

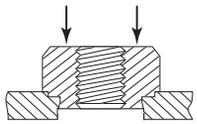

Squeezing Force Is Applied To Head Of Fastener

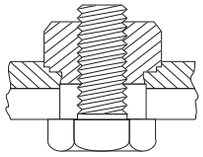

Install Bolt Or Screw From Opposite Side Of Head Of Fastener

Installation & Performance Data

	Thread Size	Shank Code	Cold-rolled Steel: Installation Force (kN)	Cold-rolled Steel: Pushout (N)	Cold-rolled Steel: Torque-out (N•m)	5052-H34 Aluminum: Installation Force (kN)	5052-H34 Aluminum: Pushout (N)	5052-H34 Aluminum: Torque-out (N•m)
METRIC (mm)	M2	-0	11.2-15.6	465	1.4	6.7-8.9	275	.9
	M2.5	-1		545	1.7		390	1.1
	M3	-2		1010	2.0		745	1.4
		-3		1100	2.0		850	1.4
	M3.5	-0	13.4-26.7	475	1.8	11.2-13.4	290	1.8
		-1		565	1.8		465	1.9
		-2		1200	2.3		965	2.5
		-3		1300	2.5		1050	2.8
	M4	-0	18-27	485	2.9	11.2-13.4	290	2.3
		-1		640	2.95		465	2.6
		-2		1245	4.2		965	4.0
		-3		1300	4.2		1100	4.0
	M5	-0	18-31	525	3.6	11.2-15.6	290	3.0
		-1		790	3.6		475	3.6
		-2		1400	6.0		1180	4.7
		-3		1500	6.0		1225	5.7
	M6	-0	27-36	1375	12.8	18-32	965	7.7
		-1-2-3		1755	16.4		1570	9.6
	M8	-1-2-3	27-36	1860	18.1	18-32	1560	13.0
	M10	-1-2-3	32-50	2000	36.2	22-36	1750	32.7
	M12	-1-2	33-49	3080	75	23-30	1400	36

Self-Clinching Nuts

Series CFH & CFHN

CFH nut fasteners are available in both heat-treated and non-heat-treated versions, offering an opportunity to up-grade fastening quality with appreciable cost reduction over weld nuts.

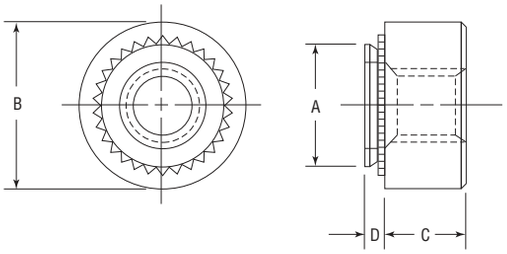

Series	Material	Finish
CFH-X	Heat-treated	None
CFH-ZI	Carbon Steel	Zinc* Clear
CFHN-X	Non-Heat-treated	None
CFHN-ZI	Carbon Steel	Zinc* Clear

*See Finish Spec. on Page 6.

Thread: Internal 2B, ANSI B1.1 (6H, ANSI/ASME B1.13M).

Use in: CFH-materials with Rockwell Hardness of B-80 or less.

CFHN -materials with Rockwell Hardness of B-60 or less.

Part Number Structure:

CFH-420-X

- Finish
- Thread Code
- Series

Dimensions & Specifications

	Thread Size	Part Number: Heat Treated	Part Number: Non-Heat Treated	D Max.	Min.	+ .005 in. (.13mm) – .000(.00)	A Max.	B ±.01 in. (±.25 mm)	C ±.005 in. (±.13 mm)	Min.
INCH	1/4-20	CFH420	CFHN420	.058	.058	.344	.343	.500	.189	.34
METRIC	M6 x 1.0	CFHM6	CFHNM6	1.48	1.48	8.75	8.72	12.8	5.0	10.0

Installation & Performance Data

		Material	Panel Thickness	Installation Force	Pushout	Torque-out
INCH	1/4-20	Cold-rolled Steel	.060 in.	4800 lbs.	450 lbs.	120 in.-lbs.
		Aluminum	.062 in.	3500 lbs.	370 lbs.	110 in.-lbs.
METRIC	M6	Cold-rolled Steel	2.24 mm	33 kN	2020 N	23.5 N•m
		Aluminum	2.29 mm	22 kN	1760 N	21.5 N•m

Self-Clinching Nuts

Series CA-Aluminum

CA aluminum self-clinching nuts provide strong load-bearing threads. All Captive Fastener self-clinching nuts fit standard hole sizes and are dimensionally identical to industry standards.

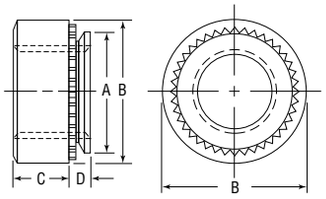

Series	Material	Finish
CA	2024-T4 Aluminum	None

Thread: Internal 2B, ANSI B1.1 (6H, ANSI/ASME B1.13M).

Use in: Materials with Rockwell Hardness of B-50 or less.

Dimensions & Specifications

	Thread Size	Part Number	D Max.	Min.	+.003 in. (+.08 mm) –.000 (–.00)	A Max.	B ± .01 in. (± .25 mm)	C ± .01 in. (± .25 mm)	Min.
INCH (in.)	#2-56	CA256-1	.038	.040	.166	.165	.25	.07	.19
		CA256-2	.054	.056					
	#4-40	CA440-1	.038	.040	.1875	.187	.25	.09	.22
		CA440-2	.054	.056					
	#6-32	CA632-1	.038	.040	.213	.212	.28	.09	.27
		CA632-2	.054	.056					
	#8-32	CA832-1	.038	.040	.234	.233	.31	.13	.28
		CA832-2	.054	.056					
	#10-24	CA1024-1	.038	.040	.296	.295	.38	.16	.31
		CA1024-2	.054	.056					
	#10-32	CA1032-1	.038	.040					
		CA1032-2	.054	.056					
	1/4-20	CA420-1	.054	.056	.344	.343	.44	.17	.34
		CA420-2	.087	.091					
		CA420-3	.120	.125					
METRIC (mm)	M2 x 0.4	CAM2-1	.97	1.0	4.22	4.2	6.3	1.5	4.8
		CAM2-2	1.37	1.4					
	M3 x 0.5	CAM3-1	.97	1.0	4.75	4.73	6.3	2.0	5.6
		CAM3-2	1.37	1.4					
	M3.5 x 0.6	CAM3.5-1	.97	1.0	5.41	5.38	7.1	2.0	6.9
		CAM3.5-2	1.37	1.4					
	M4 x 0.7	CAM4-1	.97	1.0	6.0	5.97	7.9	3.0	7.1
		CAM4-2	1.37	1.4					
	M5 x 0.8	CAM5-1	.97	1.0	7.5	7.47	9.5	3.8	7.9
		CAM5-2	1.37	1.4					
	M6 x 1.0	CAM6-1	1.37	1.4	8.75	8.73	11.1	4.1	8.6
		CAM6-2	2.21	2.3					

Self-Clinching Nuts

Series CKN

CKN self-clinching KAL-nuts provide strong internal threads in sheet material as thin as 1 mm.

Series	Material	Finish
CKN	Heat-treated Carbon Steel	Zinc* Clear

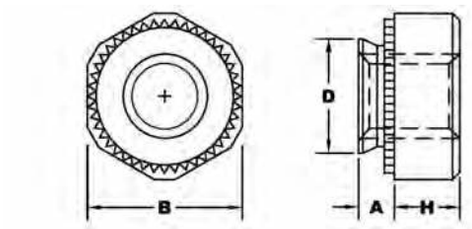

*See Finish Spec. on Page 6.

Thread: Internal 6H, ANSI/ASME B1.13.

Use in: CKN – Materials with Rockwell Hardness of HRB-80 or less.

Dimensions & Specifications

	Thread Size	Part Number Carbon Steel	D Max	B +.002 -.20	H ±.10	A Max.	Min.	+.08 -.00	Min.
METRIC (mm)	M3 x 0.5	CKNM3-1	4.45	5.5	2.0	1.0	1.0	4.5	4.5
		CKNM3-2				1.4	1.4		
	M4 x 0.7	CKNM4-1	5.45	7.0	2.2	1.0	1.0	5.5	5.5
		CKNM4-2				1.4	1.4		
	M5 x 0.8	CKNM5-1	6.45	8.0	3.0	1.0	1.0	6.5	6.5
		CKNM5-2				1.4	1.4		
	M6 x 1.0	CKNM6-1	7.95	10.0	4.0	1.0	1.0	8.0	8.0
		CKNM6-2				1.4	1.4		
	M8 x 1.25	CKNM8-2	9.95	13.0	4.5	1.4	1.4	10.0	10.0
		CKNM8-3				2.0	2.0		

Installation & Performance Data

	Thread Size	Shank	Min. Sheet	Cold-rolled Steel Installation Force (kN)	Cold-rolled Steel Pushout (N)	Cold-rolled Steel Torque-out (N•m)	5052-H34 Aluminum Installation Force (kN)	5052-H34 Aluminum Pushout (N)	5052-H34 Aluminum Torque-out (N•m)
METRIC (mm)	M3	-1	1.0	11.7	490	1.96	5.8	290	1.17
		-2	1.4	12.7	780	2.45	6.8	580	1.47
	M4	-1	1.0	12.7	580	2.94	7.8	390	1.96
		-2	1.4	13.7	880	3.92	9.8	680	2.94
	M5	-1	1.0	13.7	680	3.92	8.8	440	2.94
		-2	1.4	14.7	980	4.9	10.7	730	3.92
	M6	-1	1.0	16.6	880	7.84	11.7	580	5.88
		-2	1.4	19.6	1270	11.76	13.7	880	7.84
	M8	-2	1.0	24.5	1370	15.69	15.6	1070	9.80
		-3	1.4	29.4	1760	19.61	17.6	1370	11.76

Self-Clinching Flush Nuts

Series CFL

CFL flush nuts offer the advantage of being completely flush within the sheet while providing load-bearing threads in materials too ductile to tap. All dimensions are identical to industry standards.

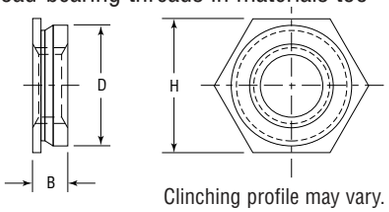

Clinching profile may vary.

Series	Material	Finish
CFL	300 Series Stainless Steel	Passivated ASTM A380

Thread: Internal 2B, ANSI B1.1 (6H, ANSI/ASME B1.13M)

Use in: Materials with Rockwell Hardness of B-70 or less.

Dimensions & Specifications

	Thread Size	Part Number	D Max.	Min.	+.003 in. (.08 mm) −.000 (.00)	H Nom.	B Max.	Min.
INCH (in.)	#2-56	CFL256-1	.171	.061	.172	.1875	.060	.23
		CFL256-2		.091			.090	
	#4-40	CFL440-1	.171	.061	.172	.1875	.060	.23
		CFL440-2		.091			.090	
	#6-32	CFL632-1	.212	.061	.213	.25	.060	.27
		CFL632-2		.091			.090	
	#8-32	CFL832-1	.289	.061	.290	.3125	.060	.28
		CFL832-2		.091			.090	
	#10-24	CFL1024-1	.311	.061	.312	.3438	.060	.31
		CFL1024-2		.091			.090	
	#10-32	CFL1032-1	.311	.061	.312	.3438	.060	.31
		CFL1032-2		.091			.090	
	1/4-20	CFL420-3	.343	.126	.344	.375	.120	.34
		CFL420-4		.156			.151	
		CFL420-5		.187			.182	
	1/4-28	CFL428-3	.343	.126	.344	.375	.120	.34
		CFL428-4		.156			.151	
		CFL428-5		.187			.182	
METRIC (mm)	M2 x 0.4	CFLM2-1	4.34	1.5	4.37	4.8	1.5	6.0
		CFLM2-2		2.3			2.3	
	M2.5 x 4.5	CFLM2.5-1	4.34	1.5	4.37	4.8	1.5	6.0
		CFLM2.5-2		2.3			2.3	
	M3 x 0.5	CFLM3-1	4.34	1.5	4.37	4.8	1.5	6.0
		CFLM3-2		2.3			2.3	
	M3.5 x 0.6	CFLM3.5-1	5.35	1.5	5.4	6.4	1.5	6.5
		CFLM3.5-2		2.3			2.3	
	M4 x 0.7	CFLM4-1	7.34	1.5	7.37	7.9	1.5	7.2
		CFLM4-2		2.3			2.3	
	M5 x 0.8	CFLM5-1	7.87	1.5	7.92	8.7	1.5	8.0
		CFLM5-2		2.3			2.3	
	M6 x 1.0	CFLM6-3	8.71	3.2	8.74	9.5	3.1	8.8
		CFLM6-4		4.0			3.9	
		CFLM6-5		4.75			4.7	

Self-Clinching Flush Nuts

Series CFL

Continued from previous page.

Installation & Performance Data

	Part Number	Max. Screw torque (in.-lbs.)	Cold-rolled Steel: Installation Force (tons)	Cold-rolled Steel: Pushout (lbs.)	5052-H34 Aluminum: Installation Force (tons)	5052-H34 Aluminum: Pushout (lbs.)
INCH (in.)	CFL256-1	1.5	1.5	200	1	200
	CFL256-2	1.5	1.5	200	1	200
	CFL440-1	2.5	1.5	200	1	200
	CFL440-2	2.5	1.5	200	1	200
	CFL632-1	3.5	1.5	200	1	200
	CFL632-2	3.5	1.5	200	1	200
	CFL832-1	5.25	2	240	1	240
	CFL832-2	5.25	2	240	1	240
	CFL1024-1	7.5	2	240	1.5	240
	CFL1024-2	7.5	2	240	1.5	240
	CFL1032-1	7.5	2	240	1.5	240
	CFL1032-2	7.5	2	240	1.5	240
	CFL420-3,4,5	35	2.25	840	1.75	640
	CFL428-3,4,5	35	2.25	840	1.75	640
	Part Number	**Max. Screw Torque (N•m)**	**Installation Force (kN)**	**Pushout (kN)**	**Installation Force (kN)**	**Pushout (kN)**
METRIC (mm)	CFLM2-1	.16	13.3	.9	8.9	.9
	CFLM2-2	.16	13.3	.9	8.9	.9
	CFLM2.5-1	.23	13.3	.9	8.9	.9
	CFLM2.5-2	.23	13.3	.9	8.9	.9
	CFLM3-1,2	.3	13.3	.9	8.9	.9
	CFLM3.5-1,2	.4	15	1.0	8.9	.9
	CFLM4-1,2	.5	17	1.1	8.9	1.0
	CFLM5-1,2	.8	17	1.1	11	1.1
	CFLM6-3,4,5	3.7	20	3.7	15	2.8

Self-Clinching Fasteners

Series CFE & CFEO
Self-Locking Threads
CFEX & CFEOX
Non-Locking Threads

CFE self-clinching fasteners are designed to provide strong threads in a minimum of space. They are available with locking and non-locking threads and are directly interchangeable with industry standards.

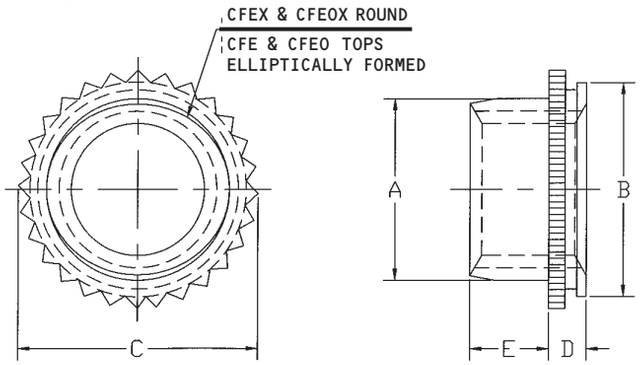

Series	Finish	Thread
CFE, CFEO	Black dry-film lubricant per MIL-46010 Type I over Cadmium	Self-Locking Internal 3B, ANSI B1.1 (6H, ANSI/ASME B1.13M)
CFEX, CFEOX	Passivated ASTM A380	Non-Locking Internal 2B, ANSI B1.1 (6H, ANSI/ASME B1.13M)

Material: 300 Series Stainless Steel.

Use in: Materials with Rockwell Hardness of B-70 or less.

Note: Thread locking performance for CFE & CFEO is equivalent to applicable NASM25027 specifications.

Dimensions & Specifications

	Thread Size	Part Number Self-Locking	Part Number Non-Locking	D Max.	Min.	+.003 in. (.08 mm) –.000(.00)	A Max.	E +.015 in. (.4 mm) –.000(.00)	B Max.	C ± .005 in. (.13 mm)	Min.
INCH (in.)	#4-40	CFE440	CFEX440	.060	.060	.172	.145	.065	.171	.192	.14
		CFEO440	CFEOX440	.040	.040						
	#6-32	CFE632	CFEX632	.060	.060	.213	.180	.075	.212	.244	.17
		CFEO632	CFEOX632	.040	.040						
	#8-32	CFE832	CFEX832	.060	.060	.290	.215	.090	.289	.322	.20
		CFEO832	CFEOX832	.040	.040						
	#10-32	CFE1032	CFEX1032	.060	.060	.290	.245	.110	.289	.322	.20
		CFEO1032	CFEOX1032	.040	.040						
	1/4-20	CFE420	CFEX420†	.060	.060	.344	.318	.120	.343	.384	.28
	1/4-28	CFE428	CFEX428†	.060	.060						
METRIC (mm)	M3 x 0.5	CFEOM3	CFEOXM3	1.02	1.02	4.39	3.96	1.90	4.37	4.88	3.6
		CFEM3	CFEXM3	1.53	1.53						
	M4 x 0.7	CFEOM4	CFEOXM4	1.02	1.02	7.39	5.23	2.55	7.37	8.17	5.2
		CFEM4	CFEXM4	1.53	1.53						
	M5 x 0.8	CFEOM5	CFEOXM5	1.02	1.02	7.39	6.48	3.05	7.37	8.17	5.2
		CFEM5	CFEXM5	1.53	1.53						
	M6 x 1.0	CFEM6	CFEXM6	1.53	1.53	8.74	7.72	3.30	8.72	9.74	7.1

†Not Stocked, available on special order.

Self-Clinching Fasteners

Series CFE & CFEO
Self-Locking Threads
CFEX & CFEOX
Non-Locking Threads

Continued from previous page.

Installation & Performance Data

	Thread Size	Series	Sheet Thickness (in.)	Cold-rolled Steel: Installation Force (lbs.)	Cold-rolled Steel: Pushout (lbs.)	Cold-rolled Steel: Torque-out (in.-lbs.)	5052-H34 Aluminum: Installation Force (lbs.)	5052-H34 Aluminum: Pushout (lbs.)	5052-H34 Aluminum: Torque-out (in.-lbs.)
INCH (in.)	#4-40	CFEO, CFEOX	.040	1500	135	10	900	85	10
		CFE, CFEX	.060	1500	200	10	900	130	10
	#6-32	CFEO, CFEOX	.040	2100	180	20	1200	100	20
		CFE, CFEX	.060	2100	250	20	1300	170	20
	#8-32	CFEO, CFEOX	.040	2500	250	47	1500	150	47
		CFE, CFEX	.060	2500	350	47	1500	250	47
	#10-32	CFEO, CFEOX	.040	2500	250	47	1500	150	47
		CFE, CFEX	.060	2500	350	47	1500	250	47
	1/4-20 1/4-28	CFE, CFEX	.060	3500	400	105	2100	300	105

	Thread Size	Series	Sheet Thickness (mm.)	Cold-rolled Steel: Installation Force (kN)	Cold-rolled Steel: Pushout (N)	Cold-rolled Steel: Torque-out (N•m)	5052-H34 Aluminum: Installation Force (kN)	5052-H34 Aluminum: Pushout (N)	5052-H34 Aluminum: Torque-out (N•m)
METRIC (mm)	M3	CFEO, CFEOX	1.0	6.7	600	1.3	4.0	380	1.3
		CFE, CFEX	1.5	6.7	900	1.3	4.0	590	1.3
	M4	CFEO, CFEOX	1.0	11.1	1100	5.3	7.0	675	5.3
		CFE, CFEX	1.5	11.1	1600	5.3	7.0	1100	5.3
	M5	CFEO, CFEOX	1.0	12	1200	5.3	7.0	675	5.3
		CFE, CFEX	1.5	12	1600	5.3	7.0	1100	5.3
	M6	CFE, CFEX	1.5	15.6	1800	11.3	9.0	1400	11.3

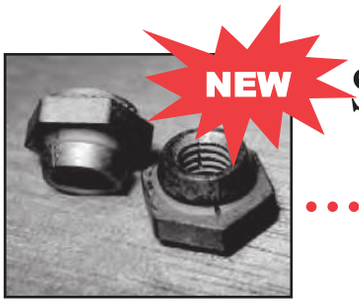

Self-Clinching Self-Locking Nuts

Series CRT, CRTS, CRTA

CRT series fasteners provide a low-installed-cost solution where a clinching fastener with repeat locking torque is required. The design allows for greater reusability and minimizes the possibility of thread damage of the mating screw.

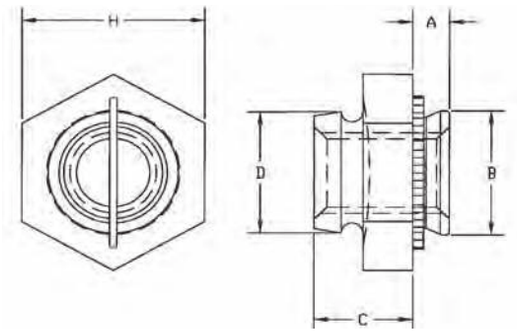

Note: Thread locking performance for CRT & CRTS is equivalent to applicable NASM25027 specifications.

Series	Material	Finish
CRT	Carbon Steel	Black Dry film Lubricant over Zinc Phosphate
CRTS	300 Series Stainless Steel	Black Dry film Lubricant
CRTA	7075-T6 Aluminum	None

Thread: Internal 3B, ANSI B1.1 (6H ANSI/ASME B1.13M).

Use in: Cold-rolled Steel.

Part Number Structure:
CRTS 440-1ML

- ROHS Compliant
- Shank Code
- Thread Code
- Series

Dimensions & Specifications

	Thread Size	Series: Carbon Steel	Series: Stainless Steel	Series: Aluminum†	Shank Code	A Max.	Min.	+.003 -.000	B Max.	D Max.	C ±.010	H Nom.	Min.
INCH (in.)	#440	CRT	CRTS	CRTA	1	.038	.040	.187	.186	.185	.135	.250	.156
					2	.054	.056						
	#6-32	CRT	CRTS	CRTA	1	.038	.040	.219	.218	.220	.145	.312	.187
					2	.054	.056						
	#8-32	CRT	CRTS	CRTA	1	.038	.040	.266	.265	.250	.175	.343	.203
					2	.054	.056						
	#10-32	CRT	CRTS	CRTA	1	.038	.040	.312	.311	.285	.205	.375	.218
					2	.054	.056						

Dimensions & Specifications

	Thread Size	Series: Carbon Steel	Series: Stainless Steel	Series: Aluminum†	Shank Code	A Max.	Min.	+.08 -.00	B Max.	D Max.	C ±.25	H Nom.	Min.
METRIC (mm)	M3 x 0.5	CRT	CRTS	CRTA	1	.97	1.0	4.75	4.73	4.85	3.43	6.35	4
					2	1.38	1.4						
	M4 x 0.7	CRT	CRTS	CRTA	1	.97	1.0	6.76	6.73	6.2	4.45	8.73	5.2
					2	1.38	1.4						
	M5 x 0.8	CRT	CRTS	CRTA	1	.97	1.0	7.92	7.9	7.4	5.21	9.53	5.6
					2	1.38	1.4						

Self-Clinching Self-Locking Nuts

Series CRT, CRTS & CRTA

Continued from previous page.

Installation & Performance Data

INCH (in.)	Thread Size	Shank Code	Cold-rolled Steel			5052-H34 Aluminum		
			Installation Force (lbs.)	Pushout (lbs.)	Torque-out (in.-lbs.)	Installation Force (lbs.)	Pushout (lbs.)	Torque-out (in.-lbs.)
	#4-40	1	3000	155	31	1600	134	26
		2	3000	258	41	2000	207	36
	#6-32	1	4000	155	46	2400	134	26
		2	4300	284	51	2700	232	46
	#8-32	1	4000	196	51	2700	155	46
		2	4300	310	72	3000	258	52
	#10-32	1	4000	258	103	3200	155	93
		2	4300	310	124	3200	258	108

Installation & Performance Data

METRIC (mm)	Thread Size	Shank Code	Cold-rolled Steel			5052-H34 Aluminum		
			Installation Force (kN)	Pushout (N)	Torque-out (N•m)	Installation Force (kN)	Pushout (N)	Torque-out (N•m)
	M3	1	13.5	688	3.5	7	598	2.9
		2	13.5	1148	4.6	9	921	4.0
	M4	1	18	874	5.8	12	688	5.1
		2	18	1376	8.1	12	1148	5.8
	M5	1	18	1148	11.6	12	688	10.4
		2	19	1376	14.0	12	1148	12.2

Self-Clinching Top Collar Lock Nuts

Series CPL & CPLC

CPL top collar lock nuts combine reliable self-clinching mounting with a reusable non-metallic thread locking element.

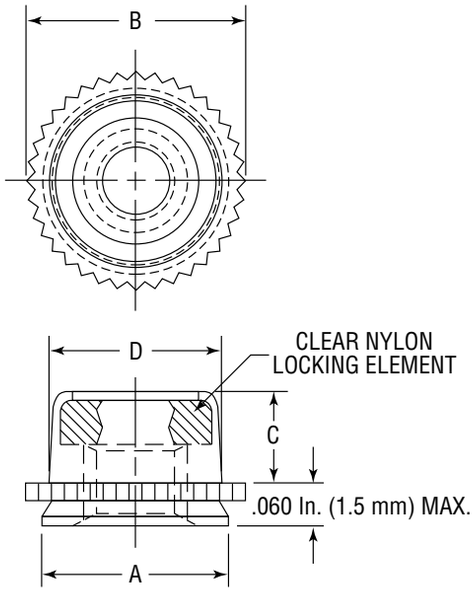

Series	Material	Finish	Locking Element
CPL	Heat-treated Carbon Steel	Zinc* Clear	Clear Nylon
CPLC	300 Series Stainless Steel	Passivated ASTM A380	Clear Nylon

*See Finish Spec. on Page 6.

Thread: Internal 2B, ANSI B1.1 (6H, ANSI/ASME B1.13M).

Use in: Material with Rockwell Hardness of B-70 or less.

Note 1. Installation Tips

Thin Sheets: May be installed in panel thickness of .040 to .059 in. (1mm to 1.5mm) if fastener is partially installed in sheet. The knurled collar must be raised above sheet by the difference in thickness from .059 in. (1.5mm).

Thick Sheets: If fastener is installed in sheet greater than .070 in. (1.7mm), knurled collar may crack if mating screw is tightened above maximum torque limit.

Note 2. Thread locking performance for CPL & CPLC is equivalent to applicable NASM25027 specifications.

Dimensions & Specifications

	Thread Size	Part Number Carbon Steel	Part Number Stainless Steel	See Note 1 Thickness Range	+.003 in. (.08mm) –.000(.00)	A Max.	B Max.	C Max.	D Max.	Min.
INCH (in.)	#4-40	CPL440	CPLC440	.059-.070	.234	.233	.274	.130	.216	.132
	#6-32	CPL632	CPLC632	.059-.070	.265	.264	.305	.130	.246	.158
	#8-32	CPL832	CPLC832	.059-.070	.297	.296	.338	.155	.278	.184
	#10-32	CPL1032	CPLC1032	.059-.070	.312	.311	.353	.165	.292	.210
METRIC (mm)	M3 x 0.5	CPLM3	CPLCM3	1.5-1.78	6.0	5.97	7.01	3.6	5.5	4.3
	M4 x 0.7	CPLM4	CPLCM4	1.5-1.78	7.5	7.47	8.54	4.2	7.0	5.6
	M5 x 0.8	CPLM5	CPLCM5	1.5-1.78	8.0	7.97	9.0	4.5	7.5	6.4

Self-Clinching Top Collar Lock Nuts

Series CPL & CPLC

Continued from previous page.

Installation & Performance Data

INCH (in.)

Thread Size	.048 in. Cold-rolled Steel				.060 in. Cold-rolled Steel		
	Max. Tightening Torque (in.-lbs.)	Installation Force (tons)	Pushout (lbs.)	Torque-out (in.-lbs.)	Installation Force (tons)	Pushout (lbs.)	Torque-out (in.-lbs.)
#4-40	9	1-2	230	20	1-2	260	20
#6-32	12	1-2	270	30	1-2	290	30
#8-32	19	1-2	270	60	1-2	290	60
#10-32	26	1-2	300	70	1-2	350	70

Thread Size	.060 in. 5052H34 Aluminum				.040 in. 5052H34 Aluminum		
	Max. Tightening Torque (in.-lbs.)	Installation Force (tons)	Pushout (lbs.)	Torque-out (in.-lbs.)	Installation Force (tons)	Pushout (lbs.)	Torque-out (in.-lbs.)
#4-40	9	1	225	20	1	150	20
#6-32	12	1	285	30	1	180	25
#8-32	19	1	290	60	1	180	28
#10-32	26	1	300	70	1	180	40

METRIC (mm)

Thread Size	1.5mm Cold-rolled Steel				1.2mm Cold-rolled Steel		
	Max. Tightening Torque (N•m)	Installation Force (kN)	Pushout (N)	Torque-out (N•m)	Installation Force (kN)	Pushout (N)	Torque-out (N•m)
M3	1.1	13.34	1156	2.2	13.34	1000	2.2
M4	2.2	13.34	1290	6.7	13.34	1200	6.7
M5	3.1	13.34	1557	7.9	13.34	1380	7.9

Thread Size	1.5mm 5052H34 Aluminum				1.0mm 5052H34 Aluminum		
	Max. Tightening Torque (N•m)	Installation Force (kN)	Pushout (N)	Torque-out (N•m)	Installation Force (kN)	Pushout (N)	Torque-out (N•m)
M3	1.1	8.90	1000	2.2	6.67	710	2.2
M4	2.2	8.90	1290	6.7	6.67	800	3.1
M5	3.1	8.90	1330	7.9	6.67	800	4.5

Self-Clinching Studs

Series CH, CHS & CHA

CH studs provide a strong flush-head assembly in material as thin as .040 in. (1.0 mm) with high torque-out and pushout performance.

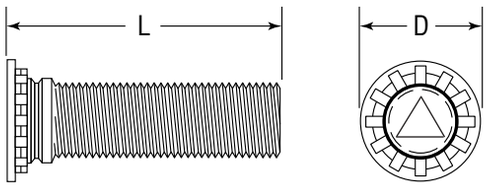

Part Number Structure:

CH 256-4

- Length Code
- Thread Code
- Series

Series	Material	Finish
CH	Heat-treated Carbon Steel	Zinc* Clear
CHS	300 Series Stainless Steel	Passivated ASTM A380
CHA	2024-T4 Aluminum	None

*See Finish Spec. on Page 6.

Thread: External 2A, ANSI B1.1 (6g ANSI/ASME B1.13M).**

Use in: CH- Materials with HRB-80 or less.
CHS- Materials with HRB-70 or less.
CHA- Materials with HRB-50 or less.
**See Note 3 on Page 6 for Gauging Spec.

Dimensions & Specifications

	Thread Size	Thread Code	L Length ±.015 in. .250	.3125	.375	.500	.625	.750	.875	1.00	1.25	1.50	D ± .015	+.003 −.000	Max.†† Rec. Nut Tight. Torque in.-lbs.	Min.	Min.
INCH (in.)	#2-56	256	-4	-5	-6	-8	-10	-12†					.144	.085	2.5	.187	.040
	#4-40	440	-4	-5	-6	-8	-10	-12	-14	-16†			.176	.111	5	.219	.040
	#6-32	632	-4	-5	-6	-8	-10	-12	-14	-16	-20	-24†	.206	.137	10	.250	.040
	#8-32	832	-4	-5	-6	-8	-10	-12	-14	-16	-20	-24†	.237	.163	15	.281	.040
	#10-24	1024		-5†	-6	-8	-10	-12	-14	-16	-20	-24†	.256	.189	25	.281	.040
	#10-32	1032		-5†	-6	-8	-10	-12	-14	-16	-20	-24	.256	.189	30	.281	.040
	1/4-20	420			-6	-8	-10	-12	-14	-16	-20	-24	.337	.249	55	.312	.062
	5/16-18	518				-8	-10	-12	-14	-16	-20	-24	.376	.311	115	.375	.093

† Not stocked, available on special order.

†† For aluminum studs, values are 60% of those listed.

Dimensions & Specifications

	Thread Size	Thread Code	L Length ± .4 mm 6	8	10	12	15	18	20	22	25	28	30	35	38	D ± .4	+.08 −.00	Max.†† Rec. Nut Tight. Torque N•m	Min.	Min.
METRIC (mm)	M2.5x0.45	M2.5	-6†	-8†	-10†	-12†	-15†	-18†								4.1	2.5	.40	5.4	1.0
	M3x0.5	M3	-6†	-8	-10	-12	-15	-18	-20	-22	-25					4.6	3.0	.72	5.6	1.0
	M3.5x0.6	M3.5	-6	-8	-10	-12	-15	-18	-20	-22	-25	-28	-30			5.3	3.5	1.1	6.4	1.0
	M4x0.7	M4	-6†	-8	-10	-12	-15	-18	-20	-22	-25	-28	-30	-35	-38	5.9	4.0	1.6	7.2	1.0
	M5x0.8	M5		-8†	-10	-12	-15	-18	-20	-22	-25	-28	-30	-35	-38	6.5	5.0	3.4	7.2	1.0
	M6x1.0	M6			-10	-12	-15	-18	-20	-22	-25	-28	-30	-35	-38	8.2	6.0	5.7	7.9	1.6
	M8x1.25	M8				-12*	-15	-18	-20	-22	-25	-28	-30	-35	-38	9.6	8.0	14.0	9.6	2.4

Note: Studs are available in lengths up to 3 in. (76.2 mm) upon special order for 1/4-20/M6 and larger.

Continued on next page.

Self-Clinching Studs

Series CH, CHS & CHA

Continued from previous page.

TOOLING

Note 1.
For material thickness of .059 in. or less, a countersunk hole is needed in the anvil.

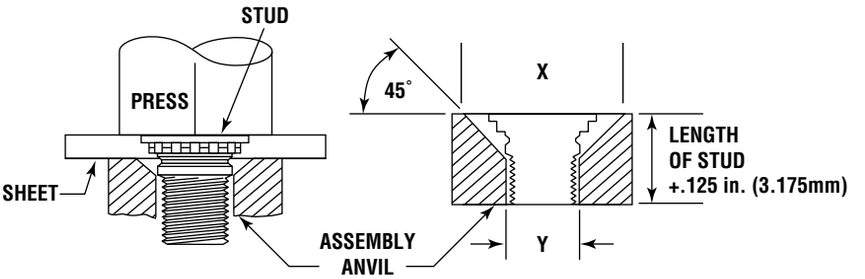

Tooling for sheet thickness .059 in. (1.51mm) and less with #2 (M2.5) thru #10 (M5) thread sizes and less than .093 in. (2.3mm) for 1/4 in. (M6) threads.

Note 2.
For material thickness of .060 in. or more, a through-hole is needed in the anvil.

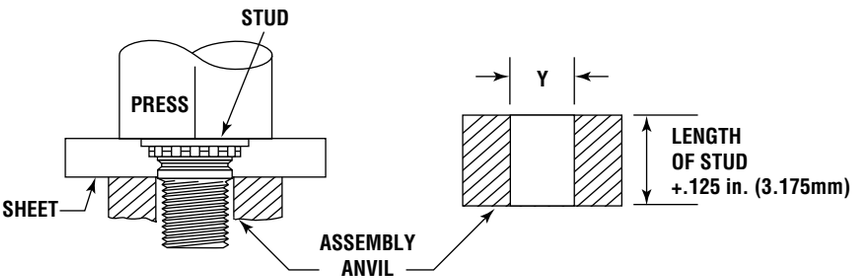

Tooling for sheet thickness .060 in. (1.51mm) minimum and greater with #2 (M2.5) thru #10 (M5) thread sizes and .092 in. (2.3mm) minimum and greater for 1/4 in. (M6) and 5/16 in. (M8) threads.

	Thread Code	Anvil Dimensions (in.) X +.004	Anvil Dimensions (in.) Y +.003
INCH (in.)	256	.110	.087
		.114	.090
	440	.136	.113
		.140	.116
	632	.162	.139
		.166	.142
	832	.188	.165
		.192	.168
	1024	.216	.191
		.220	.194
	1032	.216	.191
		.220	.194
	420	.295	.250
		.300	.253
	518	—	.3125
		—	.3155

	Thread Code	Anvil Dimensions (mm) X +.1	Anvil Dimensions (mm) Y +.08
METRIC (mm)	M2.5	3.1	2.50
	M3	3.6	3.00
	M3.5	4.1	3.50
	M4	4.6	4.00
	M5	5.6	5.00
	M6	6.6	6.00
	M8	—	8.00

Self-Clinching Studs

Series CH, CHS & CHA

Continued from previous page.

Note: Values based on stainless steel studs (steel stud values may be higher).

Installation & Performance Data

	Thread Code	Sheet Thickness & Material	Installation Force (lbs.)	Pushout (lbs.)	Torque-out (in.-lbs.)
INCH (in.)	256	.062 Aluminum	2000	95	5
		.060 Steel	2500	175	5
	440	.064 Aluminum	3800	165	10
		.060 Steel	4300	270	10
	632	.064 Aluminum	3800	175	19
		.060 Steel	4700	295	19
	832	.064 Aluminum	4800	215	29
		.060 Steel	6800	370	39
	1024 1032	.064 Aluminum	5500	265	37
		.060 Steel	6800	445	59
	420	.093 Aluminum	6500	305	64
		.088 Steel	9500	570	95
	518	.093 Aluminum	6500	425	105
		.093 Steel	10000	645	170
	Thread Code	**Sheet Thickness & Material**	**Installation Force (kN)**	**Pushout (N)**	**Torque-out (N•m)**
METRIC (mm)	M2.5	1.6 Aluminum	8.9	465	.9
		1.5 Steel	11.1	740	.9
	M3	1.6 Aluminum	12.9	600	1.6
		1.5 Steel	14.7	820	1.6
	M3.5	1.6 Aluminum	15.6	800	1.6
		1.5 Steel	22.3	1335	2.7
	M4	1.6 Aluminum	20.0	975	2.8
		1.5 Steel	28.9	1780	4.1
	M5	1.6 Aluminum	24.5	1070	3.4
		1.5 Steel	33.4	1980	6.4
	M6	2.4 Aluminum	44.5	1660	7.2
		2.2 Steel	42.3	2560	11.2
	M8	2.4 Aluminum	29.8	1910	11.2
		2.2 Steel	44.5	2890	19.1

Self-Clinching Studs

Series HCH, HCHS & HCHB (High-Torque)

HCH high-torque studs offer advantages over weld studs and other fasteners. The heavy head configuration provides greater torque-out and improved pull-through resistance.

Phospher Bronze studs provide excellent electrical conductivity and mechanical attachment in copper. The head of the stud will remain above the surface when properly installed.

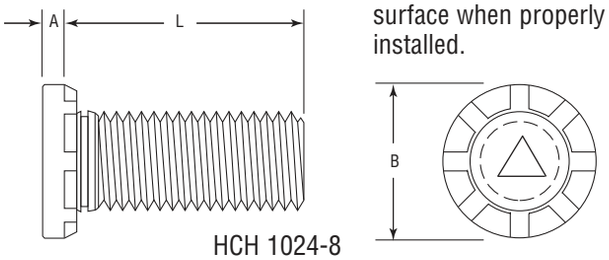

Part Number Structure:

HCH 1024-8

- Length Code
- Thread Code
- Series

Series	Material	Finish
HCH	Heat-treated Medium Carbon Steel	Zinc* Clear
HCHS	300 Series Stainless Steel	Passivated ASTM A380
HCHB	Phosphor Bronze CDA-510	None

*See Finish Spec. on Page 6.

Thread: External 2A, ANSI B1.1 (6g ANSI/ASME B1.13M).**

Use in: Cold-rolled Steel or 5052-H34 Aluminum with Rockwell Hardness as follows:

HCH- Materials with HRB-85 or less.
HCHS- Materials with HRB-70 or less.
HCHB- Materials with HRB-55 or less.

**See Note 3 on Page 6 for Gauging Spec.

Dimensions & Specifications

INCH (in.)

Thread Size	Thread Code	L Length ± .015 in. .500	.750	1.00	1.25	1.50	1.75	Min.	+.005 −.000	Max. Hole in Attach. Parts	A Max.	B ± .01	Min.
#10-24	1024	-8	-12	-16	-20	-24	-28	.050	.190	.250	.040	.300	.415
#10-32	1032	-8	-12	-16	-20	-24	-28†	.050	.190	.250	.040	.300	.415
1/4-20	420	-8	-12	-16	-20	-24	-28†	.060	.250	.312	.050	.380	.460
5/16-18	518	-8†	-12	-16	-20	-24	-28†	.075	.312	.375	.070	.480	.500
3/8-16	616		-12	-16	-20	-24	-28†	.090	.375	.437	.085	.580	.530

Thread Strength: HCH = 120 ksi / HCHS = 75 ksi / HCHB = 60 ksi.

† Not stocked, available on special order.

Dimensions & Specifications

METRIC (mm)

Thread Size	Thread Code	L Length ± .4 mm 20	25	30	35	40	50	Min.	+.13 −.00	Max. Hole In Attach. Parts	A Max.	B ± .25	Min.
M5x0.8	M5	-20	-25	-30				1.3	5.0	6.5	1.14	7.8	10.7
M6x1.0	M6	-20	-25	-30	-35			1.5	6.0	7.5	1.27	9.4	11.5
M8x1.25	M8	-20	-25	-30	-35	-40	-50	2.0	8.0	9.5	1.78	12.5	12.7
M10x1.5	M10	-20	-25	-30	-35	-40	-50	2.3	10.0	11.5	2.29	15.7	13.7

Thread Strength: HCH = 900 MPa / HCHS = 515 MPa / HCHB = 415 MPa.

Note: Studs are available in lengths up to 3 in. (76.2 mm) upon special order for 1/4-20/M6 and larger.

Self-Clinching Studs

Series HCH, HCHS & HCHB (High-Torque)

Continued from previous page.

Installation & Performance Data

	Thread Code	Series	Sheet Thickness & Material	Sheet Hardness HRB	Installation Force (lbs.)	Pushout (lbs.)	Torque-out (ft.-lbs.)	Max. Nut Tightening Torque (ft.-lbs.)
INCH (in.)	1024 1032	HCH	.060 Aluminum	15	3000	175	4	3.25
		HCH	.060 Steel	65	6000	370	5.5	3.25
		HCHS	.050 Aluminum	38	3000	175	4	3.25
		HCHS	.058 Aluminum	52	4500	320	4	3.25
		HCHB	.061 Copper CDA-110	28	3400	145	2.9	2.56
	420	HCH	.060 Aluminum	43	5500	280	11	8
		HCH	.060 Steel	59	7000	475	11	8
		HCHS	.064 Aluminum	32	4000	280	8	8
		HCHS	.072 Aluminum	43	6500	475	8	8
		HCHB	.061 Copper CDA-110	28	6000	375	5	4.35
	518	HCH	.091 Aluminum	39	8000	375	22	16
		HCH	.090 Steel	58	10000	585	22	16
		HCHS	.087 Aluminum	41	5500	375	15	16
		HCHS	.099 Steel	44	7500	585	15	16
		HCHB	.126 Copper CDA-110	32	7500	495	11	10.56
	616	HCH	.091 Aluminum	39	12000	545	25	27
		HCH	.090 Steel	58	18000	775	36	27
		HCHS	.123 Aluminum	44	10000	555	25	27
		HCHS	.099 Steel	44	13000	775	25	27
		HCHB	.126 Copper CDA-110	32	12000	555	18	21

	Thread Code	Series	Sheet Thickness & Material	Sheet Hardness HRB	Installation Force (kN)	Pushout (N)	Torque-out (N • m)	Max. Nut Tightening Torque (N • m)
METRIC (mm)	M5	HCH	1.5 Aluminum	15	13	795	5.4	4.4
		HCH	1.5 Steel	65	26	1495	7.6	4.4
		HCHS	1.62 Aluminum	35	12.4	795	5.4	4.4
		HCHS	1.47 Aluminum	54	21.7	1495	6.4	4.4
		HCHB	1.5 Copper CDA-110	28	15.6	1110	3.4	3.47
	M6	HCH	1.5 Aluminum	43	29	1265	14	10
		HCH	1.5 Steel	59	33	1745	14	10
		HCHS	1.62 Aluminum	35	15.4	1265	11	10
		HCHS	1.6 Aluminum	45	24.6	1745	11	10
		HCHB	1.5 Copper CDA-110	28	25.3	1595	6.7	5.9
	M8	HCH	2.3 Aluminum	39	35.6	1695	30	21.7
		HCH	2.3 Steel	58	44.5	2195	30	21.7
		HCHS	2.23 Aluminum	44	24.4	1695	20	21.7
		HCHS	2.48 Steel	43	37.8	2095	20	21.7
		HCHB	3.2 Copper CDA-110	32	33	2245	15.3	14.3
	M10	HCH	2.3 Aluminum	39	53.3	2440	36	36.6
		HCH	2.3 Steel	58	80	3465	49	36.6
		HCHS	2.3 Aluminum	44	44.4	2440	36	36.6
		HCHS	2.3 Steel	44	57.7	3465	36	36.6
		HCHB	3.2 Copper CDA-110	32	53.3	2495	25	28.5

Self-Clinching Studs

NEW

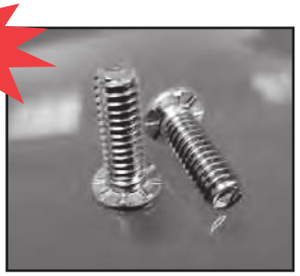

Series HCW (Wide-Head)

HCW Wide-Head studs offer advantages over weld studs and other fasteners. The wide head configuration provides strong load bearing threads in materials as thin as .040 in. (1mm).

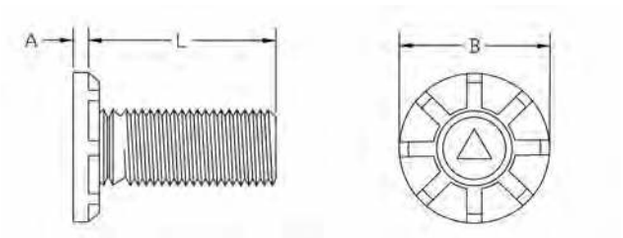

Series	Material	Finish
HCW	Heat-treated Medium Carbon Steel	Zinc* Clear

*See Finish Spec. on Page 6.

Thread: External 2A, ANSI B1.1 (6g ANSI/ASME B1.13M).**

Use in: Cold-rolled Steel or 5052-H34 Aluminum with Rockwell Hardness of HRB-85 or less:

Part Number Structure:

HCW-1032-12
- Length Code
- Thread Code
- Series

**See Note 3 on Page 6 for Gauging Spec.

Dimensions & Specifications

	Thread Size	Thread Code	L Length ± .015 in. .500	.750	1.00	1.25	1.50	1.75	2.00	Min. Sheet Thickness	+.005 -.000	A Max.	B ± .01	Max Hole in Attached Parts	Min.
INCH (in.)	#10-32	1032	-8†	-12	-16	-20	-24†	-28†	-32†	.040	.190	.048	.357	.280	.360
	1/4-20	420	-8†	-12	-16	-20	-24†	-28†	-32†	.040	.250	.060	.462	.340	.470
	5/16-18	518	-8†	-12	-16	-20	-24	-28†	-32†	.060	.312	.083	.586	.402	.560

Thread Strength= 120 ksi.

Dimensions & Specifications

	Thread Size	Thread Code	L Length ± .4 mm 15	20	25	30	35	40	50	Min. Sheet Thickness	+.13 -.00	A Max.	B ± .25	Max Hole in Attached Parts	Min.
METRIC (mm)	M5 x 08	M5	-15†	-20	-25†	-30	-35†	-40†	-50†	1	5	1.35	9.6	7.3	10
	M6 x 1.0	M6	-15†	-20	-25†	-30	-35†	-40†	-50†	1	6	1.52	11.35	8.3	11.5
	M8 x 1.25	M8	-15†	-20	-25†	-30	-35†	-40†	-50†	1.5	8	2.13	15.3	10.3	14.5

Thread Strength= 900 MPa.

† Not stocked, available on special order.

Continued on next page.

Self-Clinching Studs

Series HCW (Wide-Head)

Continued from previous page.

Installation & Performance Data

	Thread Code	Sheet Thickness & Material	Sheet Hardness HRB	Installation Force (lbs.)	Pushout (lbs.)	Torque-out (in.-lbs.)
INCH (in.)	1032	.040 Aluminum	27	7500	165	58
		.040 Cold Rolled Steel	67	9500	295	58
	420	.040 Aluminum	27	8000	175	118
		.040 Cold Rolled Steel	67	13500	335	128
	518	.060 Aluminum	22	9000	270	238
		.060 Cold Rolled Steel	65	15500	570	288

	Thread Code	Sheet Thickness & Material	Sheet Hardness HRB	Installation Force (kN)	Pushout (N)	Torque-out (N•m)
METRIC (mm)	M5	1 mm Aluminum	27	37.7	685	8.0
		1 mm Cold Rolled Steel	67	51.1	1345	8.0
	M6	1 mm Aluminum	27	39	745	11.7
		1 mm Cold Rolled Steel	67	60	1395	14.3
	M8	1.5 mm Aluminum	22	42	1225	23.4
		1.5 mm Cold Rolled Steel	65	71.1	2395	33.8

CAPTIVE® Dog-Point Studs

CAPTIVE studs are available with a dog-point end to assist the attachment of mating nuts, which is especially useful in high-speed production assembly, using motorized nut drivers. Dog-points may be specified on most CH, TCH, HCH, CHTS, and HCW style studs as a special order, using the following Part Number Structure:

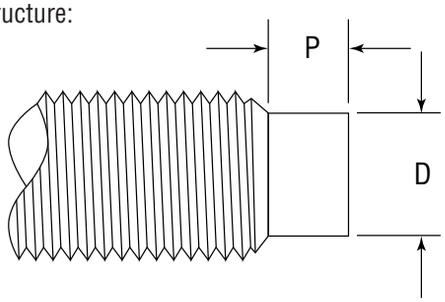

Example: HCW 1032-8 DP

- Dog-Point
- Length Code
- Thread Code
- Series

INCH (in.)	D ±.005	P ±.010	METRIC (mm)	D ±.13	P ±.25
6-32	.086	.050	M3.5 x 0.6	2.4	1.27
8-32	.111	.055	M4 x 0.7	2.79	1.4
10-24	.124	.065	M5 x 0.8	3.66	1.78
10-32	.138	.065	M6 x 1	4.37	2.03
1/4 x 20	.173	.085	M8 x 1.25	6.05	2.67
1/4 x 28	.192	.085			
5/16 x 18	.228	.105			

Note: Maximum dog-point diameter is .003 in. (.08 mm) less than the minimum minor diameter of 2B or 6g mating nut threads.

Self-Clinching Studs

Series TCH & TCHS
Non-Flush Studs

TCH non-flush studs are manufactured for use in sheets as thin as .020 inches (.5 mm) thick. The pushout and torque-out values are excellent for most applications. The head of the stud will project above the panel surface when installed properly. Do not over squeeze!

Series	Material	Finish
TCH	Heat-treated Carbon Steel	Zinc* Clear
TCHS	300 Series Stainless Steel	Passivated ASTM A380

*See Finish Spec. on Page 6.

Thread: External 2A, ANSI B1.1 (6g ANSI/ASME B1.13M).**

Use in: Cold-rolled Steel or 5052-H34 Aluminum with Rockwell Hardness as follows:

TCH - Materials with HRB 80 or less.

TCHS - Materials with HRB 70 or less.

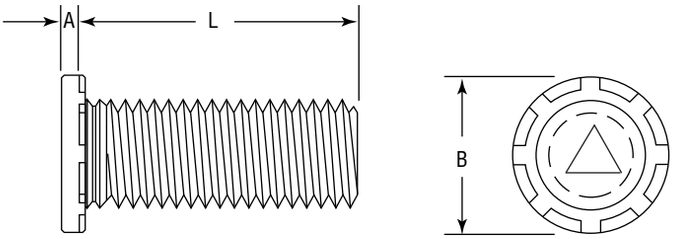

Part Number Structure:

TCH 440-4

- Length Code
- Thread Code
- Series

**See Note 3 on Page 6 for Gauging Spec.

Dimensions & Specifications

INCH (in.) Thread Size	Thread Code	L Length ± .015 in. .250	.3125	.375	.500	.625	.750	.875	1.00	1.25	1.50	Min.	+.003 −.000	A Max.	B ± .015	Min.
#4-40	440	-4	-5	-6	-8	-10	-12					.020	.111	.025	.176	.219
#6-32	632	-4	-5	-6	-8	-10	-12	-14	-16	-20	-24†	.020	.137	.025	.203	.250
#8-32	832	-4	-5	-6	-8	-10	-12	-14	-16	-20	-24†	.020	.163	.025	.234	.281
#10-24	1024		-5†	-6	-8	-10	-12	-14	-16	-20	-24†	.020	.189	.025	.250	.281
#10-32	1032		-5†	-6	-8	-10	-12	-14	-16	-20	-24†	.020	.189	.025	.250	.281

†Not stocked, available on special order.

Dimensions & Specifications

METRIC (mm) Thread Size	Thread Code	L Length ± .4 mm 6	8	10	12	15	18	20	22	25	28	30	35	38	Min.	+.08 -.00	A Max.	B ± .4	Min.
M3 x 0.5	M3	-6	-8	-10	-12	-15	-18								.51	3.0	.64	4.5	5.6
M4 x 0.7	M4			-10	-12	-15	-18	-20	-22	-25	-28	-30	-35	-38	.51	4.0	.64	5.8	7.2
M5 x 0.8	M5			-10	-12	-15	-18	-20	-22	-25	-28	-30	-35	-38	.51	5.0	.64	6.4	7.2

Self-Clinching Studs

Series TCH & TCHS
Non-Flush Studs

Continued from previous page.

Note: Values based on stainless steel studs (steel stud values may be higher).

Installation & Performance Data

	Thread Code	Max. Nut Tight. Torque (in-lbs.)	Sheet Thickness & Material	Sheet Hardness HRB	Installation Force (lbs.)	Pushout (lbs.)	Torque-out (in.-lbs.)
INCH (in.)	440	5	.020 Aluminum	28	1200	40	6.9
			.025 Steel	52	1500	95	7.8
	632	9	.020 Aluminum	28	1500	45	7.9
			.025 Steel	52	2500	105	15.8
	832	17	.020 Aluminum	28	2100	55	9.8
			.025 Steel	52	2700	115	25.7
	1024	24	.020 Aluminum	28	2500	60	13.8
	1032	27	.025 Steel	52	3000	135	27.7
METRIC (mm)	**Thread Code**	**Max. Nut Tight. Torque (N•m)**	**Sheet Thickness & Material**	**Sheet Hardness HRB**	**Installation Force (kN)**	**Pushout (N)**	**Torque-out (N•m)**
	M3	.74	.5 Aluminum	28	5.3	190	.6
			.6 Steel	52	6.7	290	1.0
	M4	1.70	.5 Aluminum	28	9.8	245	.7
			.6 Steel	52	13.4	495	2.5
	M5	3.50	.5 Aluminum	28	13.4	265	1.2
			.6 Steel	52	17.8	665	2.9

Close Edge Studs

Series CHE & CHES

CHE studs allow installation closer to material edge than standard studs without distortion of sheet edge. Provides flush-head assembly in material thickness of .040 in. (1 mm) or more.

Series	Material	Finish
CHE	Heat-treated Carbon Steel	Zinc* Clear
CHES	300 Series Stainless Steel	Passivated ASTM A380

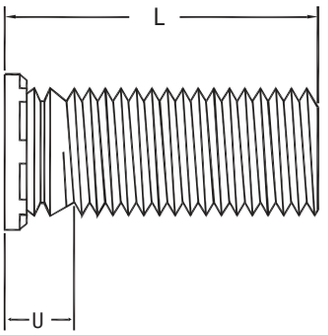

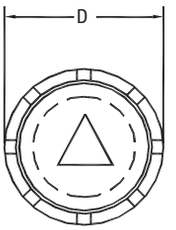

*See Finish Spec. on Page 6.

Thread: External 2A, ANSI B1.1 (6g ANSI/ASME B1.13M).**

Use in: CHE – Materials with HRB-80 or less.
CHES – Materials with HRB-70 or less.

Part Number Structure:

CHE 256 -4

- -4 → Length Code
- 256 → Thread Code
- CHE → Series

**See Note 3 on Page 6 for Gauging Spec.

Dimensions & Specifications

Note: Min Sheet Thickness .040 in.

INCH (in.)	Thread Size	Series: Steel	Series: SS	Thread Code	L Length ± .015 in. .250	.312	.375	.500	.625	.750	.875	1.00	1.25	1.50	+.003 -.000	D ±.015	U Max.	Min.
	#2-56	CHE	CHES	256	-4	-5	-6	-8	-10	-12					.085	.112	.080	.098
	#4-40	CHE	CHES	440	-4	-5	-6	-8	-10	-12	-14	-16			.111	.138	.085	.124
	#6-32	CHE	CHES	632	-4	-5	-6	-8	-10	-12	-14	-16	-20	-24	.137	.164	.090	.150
	#8-32	CHE	CHES	832	-4	-5	-6	-8	-10	-12	-14	-16	-20	-24	.163	.190	.090	.176
	#10-32	CHE	CHES	1032		-5	-6	-8	-10	-12	-14	-16	-20	-24	.189	.225	.100	.210

Dimensions & Specifications

Note: Min Sheet Thickness 1 mm.

METRIC (mm)	Thread Size	Series: Steel	Series: SS	Thread Code	L Length ± .4 mm 6	8	10	12	15	18	20	25	30	35	+.08 -.00	D ± .4	U Max.	Min.
	M2.5 x 0.45	CHE	CHES	M2.5	-6	-8	-10	-12	-15	-18					2.5	3.15	2.1	2.8
	M3 x 0.5	CHE	CHES	M3	-6	-8	-10	-12	-15	-18	-20	-25			3	3.65	2.1	3.3
	M3.5 x 0.6	CHE	CHES	M3.5	-6	-8	-10	-12	-15	-18	-20	-25	-30		3.5	4.15	2.3	3.8
	M4 x 0.7	CHE	CHES	M4	-6	-8	-10	-12	-15	-18	-20	-25	-30	-35	4	4.65	2.4	4.3
	M5 x 0.8	CHE	CHES	M5		-8	-10	-12	-15	-18	-20	-25	-30	-35	5	5.9	2.7	5.6

Close Edge Studs

Series CHE & CHES

Continued from previous page.

Installation Procedure

1) Prepare the correct size hole in the base material by punching or drilling. Do not deburr hole.
2) Place the stud through the hole in the base material and insert into the support anvil.
3) Apply sufficient squeezing force with a shop press until the head of the fastener is flush with the sheet material.

Tooling for panel thickness .059 in. (1.5 mm) and less.

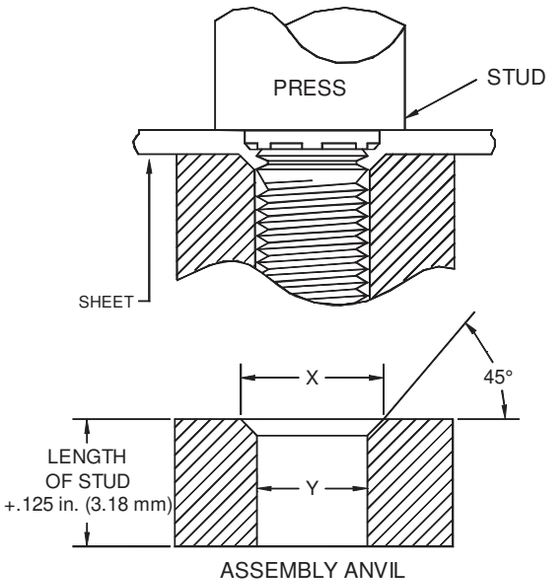

Tooling for panel thickness .060 in. (1.51 mm) and greater.

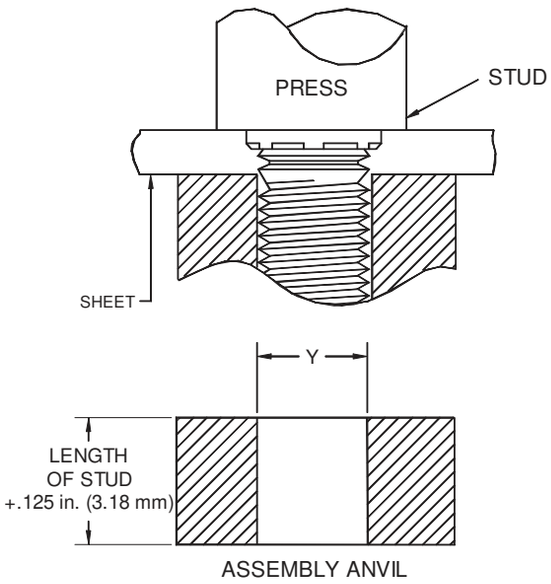

	SERIES	Anvil Dimensions (in)	
		X +.004	Y + .003
INCH (in.)	256	.110	.087
	440	.136	.113
	632	.162	.139
	832	.188	.165
	1032	.216	.191

	SERIES	Anvil Dimensions (mm)	
		X +.01	Y + .08
METRIC (mm)	M2.5	3.1	2.53
	M3	3.6	3.03
	M3.5	4.1	3.53
	M4	4.6	4.03
	M5	5.6	5.03

Close Edge Studs

Series CHE & CHES

Continued from previous page.

Installation & Performance Data

INCH (in.)

Thread Code	Max. Nut Tightening Torque (in. lbs.)	Sheet Thickness And Material	Sheet Hardness HRB	Installation Force (lbs.)	Pushout (lbs.)	Torque Out (in.-lbs.)	Pull Thru (lbs.)	Test Bushing Hole Size
256	2.3	.047 Aluminum	33	700	55	4	230	.106
	2.3	.045 Cold Rolled Steel	54	1200	85	8	425	.106
440	4.0	.047 Aluminum	33	1000	60	5	300	.132
	5.0	.045 Cold Rolled Steel	54	1200	105	11	580	.132
632	5.4	.047 Aluminum	33	1000	65	6.5	325	.158
	9.0	.045 Cold Rolled Steel	54	1500	110	15	650	.158
832	6.9	.047 Aluminum	33	1200	80	9	350	.184
	15.2	.045 Cold Rolled Steel	54	1500	125	18	740	.184
1032	9.7	.047 Aluminum	33	2500	115	18	395	.210
	19.4	.045 Cold Rolled Steel	54	4500	210	38	800	.210

METRIC (mm)

Thread Code	Max. Nut Tightening Torque (N.m.)	Sheet Thickness And Material	Sheet Hardness HRB	Installation Force (kN)	Pushout (N)	Torque Out (N•m)	Pull Thru (N)	Test Bushing Hole Size
M2.5	.41	1.2mm Aluminum	33	3.1	285	.55	1200	3
	.41	1.1mm Cold Rolled Steel	54	5.3	450	1.1	2250	3
M3	.46	1.2mm Aluminum	33	4.4	285	.65	1300	3.5
	.74	1.1mm Cold Rolled Steel	54	5.3	475	1.25	2500	3.5
M3.5	.58	1.2mm Aluminum	33	4.4	290	.76	1400	4
	1.15	1.1mm Cold Rolled Steel	54	6.6	500	1.75	2800	4
M4	.75	1.2mm Aluminum	33	5.3	365	1.1	1550	4.5
	1.7	1.1mm Cold Rolled Steel	54	6.6	550	2.1	3300	4.5
M5	1.11	1.2mm Aluminum	33	11.1	530	2.2	1850	5.5
	2.25	1.1mm Cold Rolled Steel	54	20	1000	4.4	3750	5.5

Studs For Stainless Steel Sheets

Series CHTS

CHTS studs are made of heat treated stainless steel providing a strong, flush-head assembly in stainless steel material as thin as .040 in. (1 mm) with high torque-out and pushout performance.

Series	Material	Finish
CHTS	400 Series Stainless Steel	Passivated ASTM A380

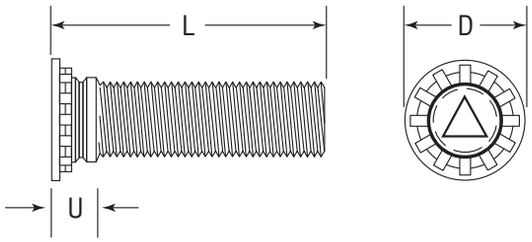

Thread: External 2A, ANSI B1.1 (6g ANSI/ASME B1.13M).
Use in: CHTS - Materials with HRB-92 or less.

Part Number Structure:

CHTS 440-48

- Length Code
- Thread Code
- Series

Dimensions & Specifications

INCH (in.) Thread Size	Series	Thread Code	L Length ±.015 in. .250	.312	.375	.500	.625	.750	.875	1.00	1.25	1.50	Sheet Thickness	Hole Size In Sheet +.003 -.000	D ±.015	U Max.	Min.
#4-40	CHTS	440	-4	-5	-6	-8	-10	-12	-14	-16			.040 - .095	.111	.176	.085	.219
#6-32	CHTS	632	-4	-5	-6	-8	-10	-12	-14	-16	-20	-24	.040 - .095	.137	.206	.090	.250
#8-32	CHTS	832	-4	-5	-6	-8	-10	-12	-14	-16	-20	-24	.040 - .095	.163	.237	.090	.281
#10-32	CHTS	1032		-5	-6	-8	-10	-12	-14	-16	-20	-24	.040 - .095	.189	.256	.100	.281
1/4-20	CHTS	420			-6	-8	-10	-12	-14	-16	-20	-24	.062 - .117	.249	.337	.135	.312
5/16-18	CHTS	518				-8	-10	-12	-14	-16	-20	-24	.093 - .148	.311	.376	.160	.375

Dimensions & Specifications

METRIC (mm) Thread Size	Series	Thread Code	L Length ±.4 mm 6	8	10	12	15	18	20	25	30	35	Sheet Thickness	Hole Size In Sheet +.08 -.00	D ±.4	U Max.	Min.
M3 x 0.5	CHTS	M3	-6	-8	-10	-12	-15	-18	-20	-25			1 - 2.4	3	4.6	2.1	5.6
M4 x 0.7	CHTS	M4	-6	-8	-10	-12	-15	-18	-20	-25	-30	-35	1 - 2.4	4	5.9	2.4	7.2
M5 x 0.8	CHTS	M5		-8	-10	-12	-15	-18	-20	-25	-30	-35	1 - 2.4	5	6.5	2.7	7.2
M6 x 1.0	CHTS	M6			-10	-12	-15	-18	-20	-25	-30	-35	1.6 - 3	6	8.2	3.0	7.9
M8 x 1.25	CHTS	M8				-12	-15	-18	-20	-25	-30	-35	2.4 - 3.8	8	9.6	3.7	9.6

Note: All items subject to minimum order.

Continued on next page.

Studs For Stainless Steel Sheets

Series CHTS

Continued from previous page.

Installation Procedure

Drill or punch the proper size hole in the parent material and apply the recommended force, with a standard shop press, to fully seat the fastener. For best results, a flat punch with a minimum hardness of Rockwell C55 should be used along with a special anvil that has a raised ring. This will assure full displacement of the stainless sheet material into the clinch ring of the stud.

Be sure to monitor the height of the ring on the anvil periodically and replace anvil when ring height wears down to .005 in. (.13 mm) to assure desired performance.

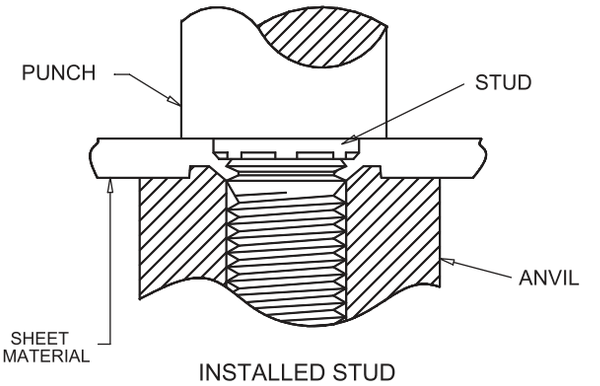

INCH (in.) Thread Code	Anvil Dimensions (in.) E	F	G	H	R1	R2
440	.113	.144	.174	.010	.003	.005
632	.140	.170	.200	.010	.003	.005
832	.166	.202	.236	.010	.003	.005
1032	.191	.235	.275	.010	.003	.005
420	.251	.310	.363	.020	.003	.005
518	.313	.385	.474	.020	.003	.005

METRIC (mm) Thread Code	Anvil Dimensions (mm) E	F	G	H	R1	R2
M3	3.05	3.81	4.57	.25	.08	.13
M4	4.04	4.95	5.82	.25	.08	.13
M5	5.08	6.15	7.16	.25	.08	.13
M6	6.05	7.87	8.79	.51	.08	.13
M8	7.95	9.78	10.27	.51	.08	.13

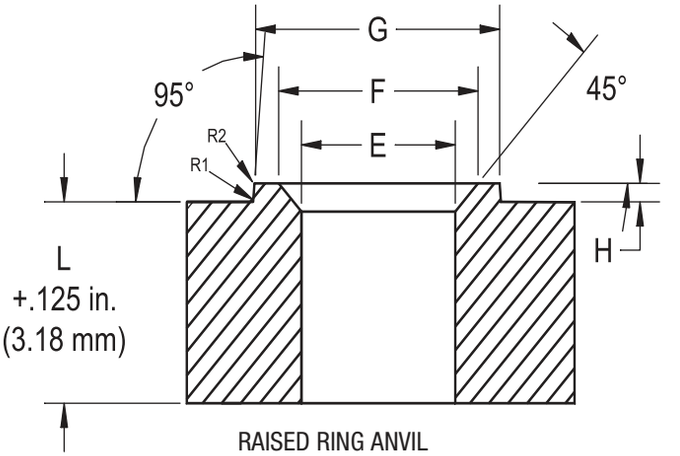

Studs For Stainless Steel Sheets

Series CHTS

Continued from previous page.

Dimensions & Specifications

	Thread Code	Max. Nut Tightening Torque (in.-lbs.)	Sheet Thickness & Material	Sheet Hardness HRB Max.	Installation (lbs.)	Pushout (lbs.)	Torque-out (in.-lbs.)	Pull thru (lbs.)
INCH (in.)	440	6	.060 SS	92	9000	440	15	795
	632	11	.060 SS	92	9500	530	25	1340
	832	21	.060 SS	92	11200	775	57	1790
	1032	33	.060 SS	92	12000	1045	93	2245
	420	70	.060 SS	92	13000	1590	154	3850
	518	80	.090 SS	92	16000	1775	295	7375

	Thread Code	Max. Nut Tightening Torque (N•m)	Sheet Thickness & Material	Sheet Hardness HRB Max.	Installation (kN)	Pushout (N)	Torque-out (N•m)	Pull thru (N)
METRIC (mm)	M3	.9	1.5mm SS	92	40	2210	1.7	3510
	M4	2.1	1.5mm SS	92	50	3200	6.4	7960
	M5	4.3	1.5mm SS	92	53	3570	10.5	9980
	M6	7.2	1.5mm SS	92	58	4195	15.7	14880
	M8	9.0	2.3mm SS	92	71	7895	33.3	32804

Self-Clinching Concealed-Head Studs

NEW

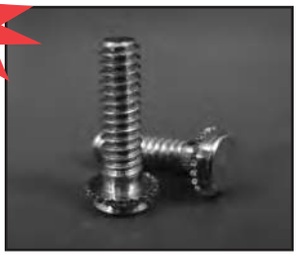

Series CFA & CFC

CFA & CFC concealed-head studs allow permanent mounting in thin metal sheets, using a hollow punch and solid anvil. The stud head is pressed permanently into a blind milled hole, with no marring of the exterior surface.

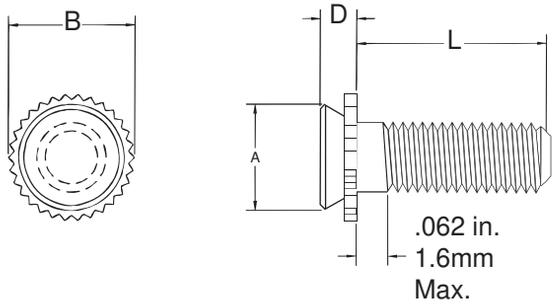

Series	Material	Finish
CFA	2024-T4 Aluminum	None
CFC	300 Series Stainless Steel	Passivated ASTM A380

Thread: External 2A, ANSI B1.1 (6g ANSI/ASME B1.13M).*

Use in: CFA - HRB-50 or less.
CFC - HRB-70 or less.

Part Number Structure:

CFA-1-440-4

- Length Code
- Thread Code
- Shank Length
- Series

*See Note 3 on Page 6 for Gauging Spec.

Dimensions & Specifications

	Thread Size	Material: Aluminum	Material: Stainless Steel	Thread Code	L Length ± .015 (Length Code is in 16ths of an inch) .250	.375	.500	.625	.750	1.00	Min.	Blind Mounting Hole Dia. +.003 -.000	Min. Depth Of Blind Hole	D Max.	B ± .010	A Max.	Min.	Max. Hole in Attached Parts
INCH (in.)	#4-40	CFA-1	CFC-1	440	-4	-6	-8	-10	-12		.062	.172	.043	.041	.205	.171	.156	.135
		CFA-2	CFC-2								.093		.075	.071				
	#6-32	CFA-1	CFC-1	632	-4	-6	-8	-10	-12	-16	.062	.213	.043	.041	.250	.212	.188	.160
		CFA-2	CFC-2								.093		.075	.071				
	#8-32	CFA-1	CFC-1	832	-4	-6	-8	-10	-12	-16	.062	.290	.043	.041	.328	.289	.219	.185
		CFA-2	CFC-2								.093		.075	.071				
	#10-32	CFA-1	CFC-1	1032		-6	-8	-10	-12	-16	.062	.312	.043	.041	.350	.311	.250	.210
		CFA-2	CFC-2								.093		.075	.071				

Dimensions & Specifications

	Thread Size	Material: Aluminum	Material: Stainless Steel	Thread Code	L Length ± .4 (Length Code is in mm) 6	8	10	12	16	20	25	Min.	Blind Mounting Hole Dia. +.08 -.00	Min. Depth Of Blind Hole	D Max.	B ± .25	A Max.	Min.	Max. Hole in Attached Parts
METRIC (mm)	M3x0.5	CFA-1	CFC-1	M3	-6	-8	-10	-12	-16	-20		1.6	4.4	1.09	1.04	5.21	4.35	4	3.6
		CFA-2	CFC-2									2.4		1.91	1.8				
	M4x0.7	CFA-1	CFC-1	M4	-6	-8	-10	-12	-16	-20	-25	1.6	7.4	1.09	1.04	8.33	7.35	5.6	4.6
		CFA-2	CFC-2									2.4		1.91	1.8				
	M5x0.8	CFA-1	CFC-1	M5			-10	-12	-16	-20	-25	1.6	7.95	1.09	1.04	8.89	7.9	6.4	5.6
		CFA-2	CFC-2									2.4		1.91	1.8				

†Not stocked, available on special order.

Continued on next page.

Self-Clinching Concealed-Head Studs

Series CFA & CFC

Continued from previous page.

Installation & Performance Data

	Type	Thread Code	Tightening Torque Max. (in.-lbs.)	Sheet Material: Cold-rolled Steel Installation Force (lbs.)	Cold-rolled Steel Pullout (lbs.)	5052-H34 Aluminum Installation Force (lbs.)	5052-H34 Aluminum Pullout (lbs.)
INCH (in.)	CFC-1	440	4.75	1800	240	1400	130
		632	9	2500	260	1800	160
		832	18	4000	270	2800	180
		1032	32	5000	290	4000	210
	CFC-2	440	4.75	2000	240	1500	200
		632	9	2700	350	2500	260
		832	18	3300	440	3000	310
		1032	32	4000	680	3500	360
	CFA-1	440	2.85	N/A	N/A	1400	125
		632	5.4	N/A	N/A	1800	135
		832	10.8	N/A	N/A	2800	145
		1032	19.2	N/A	N/A	4000	170
	CFA-2	440	2.85	N/A	N/A	1500	190
		632	5.4	N/A	N/A	2500	220
		832	10.8	N/A	N/A	3000	240
		1032	19.2	N/A	N/A	3500	300

	Type	Thread Code	Max. (N•m)	(kN)	(N)	(kN)	(N)
METRIC (mm)	CFC-1	M3	.5	8	1065	6.2	575
		M4	2	17.8	1200	12.5	800
		M5	3.6	22.2	1290	17.8	930
	CFC-2	M3	.5	8.9	1065	6.7	890
		M4	2	14.7	1955	13.3	1375
		M5	3.6	17.8	3020	15.6	1600
	CFA-1	M3	.3	N/A	N/A	6.2	555
		M4	1.2	N/A	N/A	12.5	645
		M5	2.16	N/A	N/A	17.8	755
	CFA-2	M3	.3	N/A	N/A	6.7	845
		M4	1.2	N/A	N/A	13.3	1065
		M5	2.16	N/A	N/A	15.6	1330

Self-Clinching Concealed-Head Studs

Series CFA & CFC
Typical Installation Method

Continued from previous page.

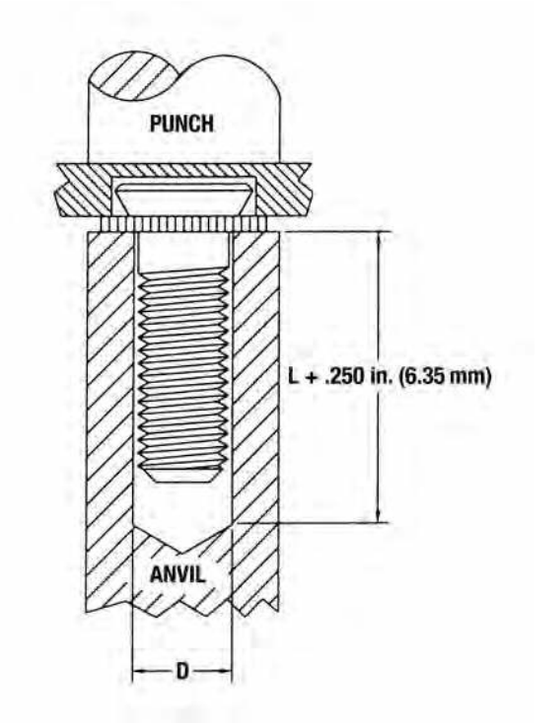

Installation Procedure

1. Mill a blind hole in material to specified depth.*
2. Place fastener into hole in anvil.
3. Place sheet material over head of fastener.
4. Apply a downward squeezing force with punch, pressing on sheet material until serrated collar of fastener is flush with surface.

*Depth of blind holes may be greater than minimum, if sheet thickness allows.

Anvil 'D' Diameter Dimensions for Concealed Head Studs

	Series	Thread Code	D Dia. (in.)
INCH (in.)	CFA CFC	440	.127
		632	.152
		832	.179
		1032	.205

	Series	Thread Code	D Dia. (mm)
METRIC (mm)	CFA CFC	M3	3.4
		M4	4.4
		M5	5.4

Self-Clinching Pins

Series CH, CHN, CHS & CHA

CH pins provide a strong flush-head assembly in material as thin as .040 inches (1 mm) with high pushout performance.

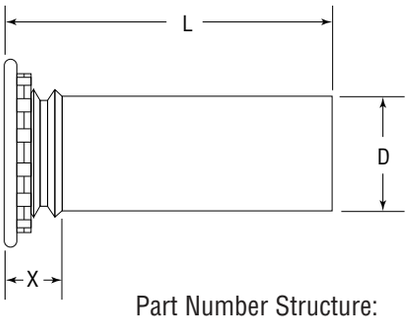

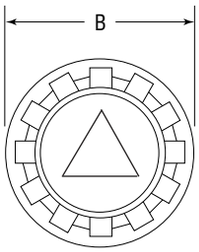

Series	Material	Finish
CH	Carbon Steel, Heat-treated	Zinc* Clear
CHN	Carbon Steel, Non-Heat-treated	Zinc* Clear
CHS	300 Series Stainless Steel	Passivated ASTM A380
CHA	2024-T4 Aluminum	None

*See Finish Spec. on Page 6.

Part Number Structure:

CH 073-4

- Length Code
- Pin Diameter
- Series

Use in: CH – Materials with HRB-80 or less.
CHN – Materials with HRB-50 or less.
CHS – Materials with HRB-70 or less.
CHA – Materials with HRB-50 or less.

Dimensions & Specifications

INCH (in.)

D Pin Dia. ± .002	L Length ± .015 in. .250	.3125	.375	.500	.625	.750	.875	1.00	1.25	1.50	B ± .015	X Max.	Min.	+.003 −.000	Min.
.073	-4	-5	-6	-8	-10						.15	.075	.040	.085	.19
.084	-4	-5	-6	-8	-10	-12					.16	.085	.040	.099	.22
.094	-4	-5	-6	-8	-10	-12					.18	.085	.040	.111	.22
.103	-4	-5	-6	-8	-10	-12					.18	.085	.040	.118	.22
.106	-4	-5	-6	-8	-10	-12					.19	.090	.040	.125	.22
.116	-4	-5	-6	-8	-10	-12	-14	-16	-20		.21	.090	.040	.137	.25
.120	-4	-5	-6	-8	-10	-12	-14	-16	-20		.21	.090	.040	.137	.25
.137	-4	-5	-6	-8	-10	-12	-14	-16	-20	-24	.23	.090	.040	.157	.28
.141	-4	-5	-6	-8	-10	-12	-14	-16	-20	-24	.24	.090	.040	.163	.28
.160		-5	-6	-8	-10	-12	-14	-16	-20	-24	.26	.100	.040	.189	.28
.167		-5	-6	-8	-10	-12	-14	-16	-20	-24	.26	.100	.040	.189	.28
.173		-5	-6	-8	-10	-12	-14	-16	-20	-24	.26	.100	.040	.197	.28
.207			-6	-8	-10	-12	-14	-16	-20	-24	.32	.135	.062	.236	.31
.215				-8	-10	-12	-14	-16	-20	-24	.34	.135	.062	.250	.31
.223				-8	-10	-12	-14	-16			.34	.135	.062	.250	.31
.273				-8	-10	-12	-14	-16	-20	-24	.38	.160	.093	.312	.38
.281				-8	-10	-12	-14	-16			.38	.160	.093	.312	.38

Note: 1. Pins are available in lengths up to 3 in. (76.2 mm) upon special order.
2. Tapered-point pins are available upon request, subject to minimum order quantity.

Continued on next page.

Self-Clinching Pins

Series CH, CHN, CHS & CHA

Continued from previous page.

Dimensions & Specifications

METRIC (mm)	D Pin Dia. ± .05	L Length ± .4mm										B ± .4	X Max.	Min.	+ .08 – .00	Min.
		6	8	10	12	15	18	20	25	30	35					
	3mm	-6	-8	-10	-12	-15	-18	-20	-25	-30	N/A	5.3	2.3	1.0	3.5	6.4
	4mm	N/A	-8	-10	-12	-15	-18	-20	-25	-30	-35	6.0	2.3	1.0	4.1	7.1
	5mm	N/A	-8	-10	-12	-15	-18	-20	-25	-30	-35	7.5	2.55	1.0	5.5	7.6

Self-Clinching Pins

Series CGS
(Tapered Guide Pins)

CGS Tapered Guide Pins provide a stong flush-head assembly in materials as thin as .040 in. (1mm) with high pushout resistance. A tapered end allows ease of locating mating hole in a variety of alignment and pivot applications.

Series	Material	Finish
CGS	300 Series Stainless Steel	Passivated ASTM A380

Use in: Materials with Rockwell Hardness of B-70 or less.

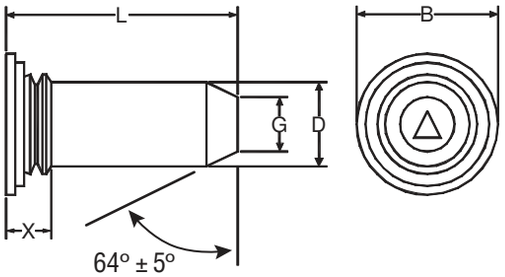

Part Number Structure:

CGS-125-8

- Length Code
- Thread Code
- Series

Dimensions & Specifications

INCH (in.) Pin Dia. D ± .002	L Length ± .015 in. .375	.500	.625	.750	1.00	B ± .015	X Max.	G ± .006	Min.	+ .003 - .000	Min.
.125	-6	-8	-10	-12		.205	.090	.090	.040	.144	.250
.187	-6	-8	-10	-12	-16	.270	.090	.132	.040	.205	.280
.250		-8	-10	-12	-16	.335	.090	.177	.040	.272	.310

METRIC (mm) Pin Dia. D ± .05	L Length ± .4mm 8	10	12	16	20	B ± .4	X Max.	G ± .15	Min.	+ .08 - .00	Min.
3mm	-8	-10	-12	-16		5.2	2.29	2.05	1	3.5	6.4
4mm	-8	-10	-12	-16		6.12	2.29	2.82	1	4.5	7.1
5mm		-10	-12	-16	-20	7.19	2.29	3.53	1	5.5	7.6
6mm			-12	-16	-20	8.13	2.29	4.24	1	6.5	7.9

Installation & Performance Data

INCH (in.) Pin Dia. D ± .002	Test Material	Sheet Hardness HRB	Installation (lbs.)	Pushout (lbs.)
.125	Aluminum	20	4500	145
	Steel	62	6500	245
.187	Aluminum	18	6500	225
	Steel	60	8000	395
.250	Aluminum	18	7000	265
	Steel	62	9000	495

METRIC (mm) Pin Dia. D ± .05	Test Material	Sheet Hardness HRB	Installation (kN)	Pushout (kN)
3mm	Aluminum	22	12	.55
	Steel	65	22	.97
4mm	Aluminum	19	22	.88
	Steel	66	26.4	1.53
5mm	Aluminum	18	28.6	1.00
	Steel	60	35.2	1.75
6mm	Aluminum	18	30.8	1.05
	Steel	62	39.6	2.05

Broaching-Type Fasteners

Series CKF2 & CKFS2

CKF2 and CKFS2 broaching-type fasteners are designed for use on printed circuit boards and on most brittle or hard materials; such as, glass laminates, epoxy or resin with paper, nylon, or canvas bases. They are also used on materials too thin or unsuitable for threading, such as acrylic and polycarbonate panels.

Since the aforementioned materials do not flow under pressure, these fasteners are designed with a knurled shank that can be pressed into a drilled hole. The shank grips the board with an interference fit by broaching its way into the panel as it is squeezed into the holes.

Series	Material	Finish
CKF2	Carbon Steel	Electro tin plating (Zinc* optional)
CKFS2	300 Series Stainless Steel	Passivated ASTM A380

*See Finish Spec. on Page 6.

Thread: Internal 2B, ANSI B1.1 (6H, ANSI/ASME B1.13M).

Use in: Materials with Rockwell Hardness of B-60 or less.

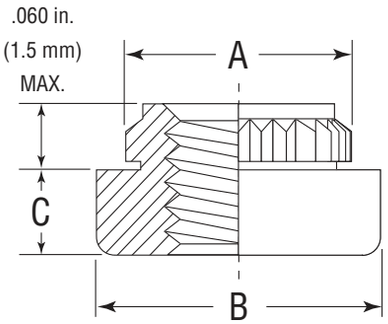

Dimensions & Specifications

	Thread Size	Part Number Carbon Steel	Part Number Stainless Steel	A ± .003	B ± .005	C ± .005	+ .003 –.000	Min.	Min.
INCH (in.)	#2-56	CKF2256	CKFS2256	.165	.219	.065	.147	.16	.060
	#4-40	CKF2440	CKFS2440	.184	.219	.065	.166	.17	.060
	#6-32	CKF2632	CKFS2632	.231	.281	.065	.213	.22	.060
	#8-32	CKF2832	CKFS2832	.268	.344	.096	.250	.25	.060
	#10-24	CKF21024	CKFS21024	.290	.375	.127	.272	.28	.060
	#10-32	CKF21032	CKFS21032	.290	.375	.127	.272	.28	.060
	Thread Size	**Part Number Carbon Steel**	**Part Number Stainless Steel**	**A ± .08**	**B ± .13**	**C ± .13**	**+ .08 –.00**	**Min.**	**Min.**
METRIC (mm)	M2 x 0.4	CKF2M2	CKFS2M2	4.19	5.56	1.5	3.7	4.2	1.5
	M2.5 x 0.45	CKF2M2.5	CKFS2M2.5	4.68	5.56	1.5	4.2	4.5	1.5
	M3 x 0.5	CKF2M3	CKFS2M3	4.68	5.56	1.5	4.2	4.5	1.5
	M4 x 0.7	CKF2M4	CKFS2M4	6.81	8.74	2.0	6.4	6.4	1.5
	M5 x 0.8	CKF2M5	CKFS2M5	7.37	9.53	3.0	6.9	7.1	1.5

Note: CKF2 & CKFS2 broaching fasteners are designed for unplated through-holes. When installed in plated through-holes, a hole tolerance of +.005 - .001 in. (+.13 - .03 mm) should be used.

When used in plated through-holes, performance will be reduced and plating may be damaged by knurl.

Continued on next page.

Broaching-Type Fasteners

Series CKF2 & CKFS2

Continued from previous page.

Installation & Performance Data

		Fiberglass .060 in. (1.5 mm)		
	Thread Size	Installation Force (lbs.)	Pushout (lbs.)	Torque-out (in.-lbs.)
INCH (in.)	#2-56	400	60	6
	#4-40	400	65	15
	#6-32	500	80	30
	#8-32	700	95	35
	#10-24	700	100	40
	#10-32	700	100	40
	Thread Size	**Installation Force (kN)**	**Pushout (N)**	**Torque-out (N•m)**
METRIC (mm)	M2	2.22	265	.65
	M2.5	2.22	285	1.35
	M3	2.22	285	1.70
	M4	2.90	415	3.95
	M5	2.90	435	4.52

Broaching-Type Standoffs

Series CKFE & CKFSE

CKFE and CKFSE threaded and non-threaded standoffs allow screws to be inserted through multiple layered boards for stacked assemblies. All fasteners from Captive Fastener are identical to industry standards so that they can be fed through standard automatic insertion equipment.

Series	Material	Finish
CKFE	Carbon Steel	Electro Tin Plating ASTM B545 Class B (Zinc* Clear Optional)
CKFSE	300 Series Stainless Steel	Passivated ASTM A380

*See Finish Spec. on Page 6.

Thread: Internal 2B, ANSI B1.1 (6H, ANSI/ASME B1.13M).

Use in: CKFE - Materials with Rockwell Hardness of B-60 or less.
CKFSE - Materials with Rockwell Hardness of B-70 or less.

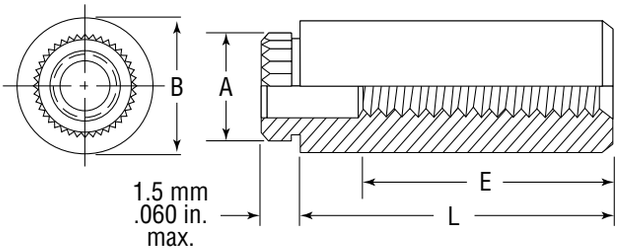

† Not stocked, available on special order. Note: Min Panel Thickness .060 in. (1.5mm)

Part Number Structure:

CKFE 440-4

- Length Code
- Thread/Hole Size
- Series

Note: CKFE & CKFSE broaching standoffs are designed for unplated through-holes. When installed in plated through-holes, a hole tolerance of +.005 - .001 in. (+.13 - .03 mm) should be used.

When used in plated through-holes performance will be reduced and plating may be damaged by knurl.

Dimensions & Specifications

	Thread Size	Thru Hole +.004 -.003	Part Number Carbon Steel	Part Number Stainless Steel	L Length ± .005 in. .125	.250	.375	.500	.625	.750	.875	A ± .003	B ± .005	+.003 -.000	Min.
INCH (in.)	#4-40		CKFE440	CKFSE440	-4	-8	-12	-16	-20	-24†		.184	.219	.166	.17
	#6-32		CKFE632	CKFSE632	-4	-8	-12	-16	-20	-24†	-28†	.231	.281	.213	.22
		.116	CKFE116	CKFSE116	-4	-8	-12	-16	-20	-24†		.184	.219	.166	.17
		.143	CKFE143	CKFSE143	-4	-8	-12	-16	-20	-24†	-28†	.231	.281	.213	.22
	E=minimum thread length				Full			.375 ± .015							
	Thread Size	+.10 -.08	Part Number Carbon Steel	Part Number Stainless Steel	Length ± .13 mm 3	4	6	8	10	12	14	16	A ± .08	B ±.13	+.08 -.00	Min.
METRIC (mm)	M3x0.5		CKFEM3	CKFSEM3	-3	-4	-6	-8	-10	-12	-14	-16†	4.68	5.56	4.2	4.4
		3.6	CKFE3.6	CKFSE3.6	-3	-4	-6†	-8†	-10†	-12†	-14†	-16†	5.87	7.14	5.4	5.5
		4.2	CKFE4.2	CKFSE4.2	-3†	-4†	-6†	-8†	-10†	-12†	-14†	-16†	6.86	8.74	6.4	7.1
	E=minimum thread length (where applicable)				Full					9.5 ± .4						

Installation & Performance Data

	Thread Size	Fiberglass .060 in. (1.5 mm) Installation Force (lbs.)	Pushout (lbs.)	Torque-out (in.-lbs.)
INCH (in.)	#4-40	400	65	14
	#6-32	500	80	29
METRIC (mm)	Thread Size	Installation Force (kN)	Pushout (N)	Torque-out (N•m)
	M3	2.22	295	1.35

Broaching-Type Studs

Series CKFH

CKFH broaching-type studs are electroplated with tin so they are readily solderable. Thus, they can be used both as solderable connectors and as permanently mounted mechanical fasteners.

Part Number Structure:

CKFH 440-4

- Length Code
- Thread Code
- Series

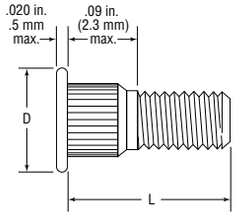

Shank profile may vary.

Series	Material	Finish
CKFH	Phosphor Bronze CDA-510	Electro Tin Plating ASTM B545 Class B (Zinc* Optional)

*See Finish Spec. on Page 6.

Thread: External 2A, ANSI B1.1 (6g ANSI/ASME B1.13M).**

Use in: Materials with Rockwell Hardness of B-55 or less.

**See Note 3 on Page 6 for Gauging Spec.

Dimensions & Specifications

	Thread Size	Part Number	L Length ± .010 in. .250	.312	.375	.500	.625	.750	D ±.010	+.003 −.000	Max. Size Clear. Hole in Attach. Parts	Max. Nut Tight. Torque (in.-lbs.)	Min.	Anvil Hole +.003 −.000	Min.
INCH (in.)	#4-40	CKFH440	-4	-5	-6	-8	-10	-12	.18	.120	.145	4	.15	.113	.060
	#6-32	CKFH632	-4	-5	-6	-8	-10	-12	.20	.140	.170	8	.19	.140	.060
	#8-32	CKFH832		-5	-6	-8	-10	-12	.23	.166	.195	15	.20	.166	.060
	#10-32	CKFH1032			-6	-8	-10	-12	.25	.189	.220	18	.20	.191	.060

	Thread Size	Part Number	L Length ± .25 mm 6	8	10	12	15	18	D ±.25	+.08 −.00	Max. Size Clear. Hole in Attach. Parts	Max. Nut Tight. Torque	Min.	Anvil Hole +.08 −.00	Min.
METRIC (mm)	M3x0.5	CKFHM3	-6	-8	-10	-12	-15	-18	4.58	3.0	3.7	.45	3.8	3.1	1.5
	M4x0.7	CKFHM4		-8	-10	-12	-15	-18	5.74	4.2	4.8	1.60	5.1	4.1	1.5
	M5x0.8	CKFHM5			-10	-12	-15	-18	6.60	5.0	5.8	2.10	5.3	5.1	1.5

Installation & Performance Data

	Thread Size	Fiberglass .060 in. (1.5 mm) Installation Force (lbs.)	Pushout (lbs.)	Torque-out (in.-lbs.)
INCH (in.)	#4-40	400	65	7
	#6-32	400	70	11
	#8-32	400	80	16
	#10-32	400	90	17
	Thread Size	**Installation Force (kN)**	**Pushout (N)**	**Torque-out (N•m)**
METRIC (mm)	M3	1.80	285	.79
	M4	1.80	355	1.80
	M5	1.80	400	1.92

Flare Mounted Threaded Standoffs

Series CKFB3

CKFB3 flare mounted threaded standoffs provide a flared shank for stronger holding power and are used for spacing or stacking PC boards.

Series	Material	Finish
CKFB3	Brass CDA-360	Electro Tin Plating ASTM B545 Class B (Zinc* Optional)

*See Finish Spec. on Page 6.

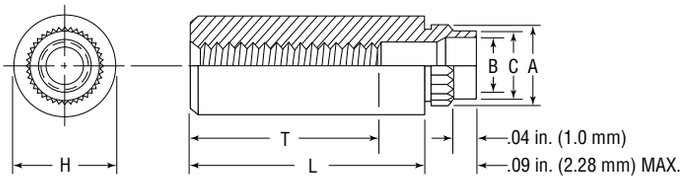

Part Number Structure:

CKFB3 440-2

- Length Code
- Thread Code
- Series

Thread: Internal 2B ANSI B1.1 (6H, ANSI/ASME B1.13M).
Use in: Materials with Rockwell Hardness of B-65 or less.

Dimensions & Specifications

	Thread Size	Part Number	L Length ± .005 in. .0625	.125	.1875	.250	.3125	.375	.500	.625	.750	A ±.003	C Max.	B ±.003	H ±.005	+.005 −.001	Min.	Min.
INCH (in.)	#4-40	CKFB3440	-2	-4	-6	-8	-10	-12	-16	-20		.179	.165	.122	.22	.166	.17	.050
	#6-32	CKFB3632	-2	-4	-6	-8	-10	-12	-16	-20*	-24*	.226	.212	.171	.28	.213	.22	.065
	"T" Minimum thread length		Full						.375 ±.015									

Dimensions & Specifications

	Thread Size	Part Number	L Length ± .13 mm 2	3	4	6	8	10	12	14	16	A ± .08	C Max.	B ±.08	H ±.13	+.13 −.03	Min.	Min.
METRIC (mm)	M3x0.5	CKFB3M3	-2	-3	-4	-6	-8	-10	-12	-14	-16	4.55	4.22	3.20	5.56	4.2	4.33	1.27
	M4x0.7	CKFB3M4	-2	-3	-4	-6	-8	-10	-12	-14	-16	6.68	6.40	5.23	8.74	6.4	6.36	1.65
	"T" Minimum thread length		Full						9.5 ± .4									

Installation & Performance Data

	Thread Size	Fiberglass .060 in. (1.5 mm) Installation Force (lbs.)	Pushout (lbs.)	Torque-out (in.-lbs.)
INCH (in.)	#4-40	1000	140	18
	#6-32	1500	170	28
	Thread Size	**Installation Force (kN)**	**Pushout (N)**	**Torque-out (N•m)**
METRIC (mm)	M3	4.4	560	2.02
	M4	6.0	680	3.20

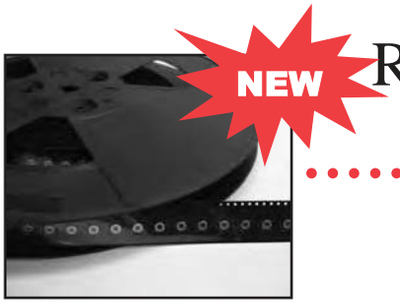

Reel Mounted Spacers and Nuts

Series CRM

CRM Reel Mount nuts and spacers provide a low-installed-cost solution for surface mount hardware. The fasteners are fed from the recyclable reel using "pick and place" equipment and oriented prior to the reflow soldering operation.

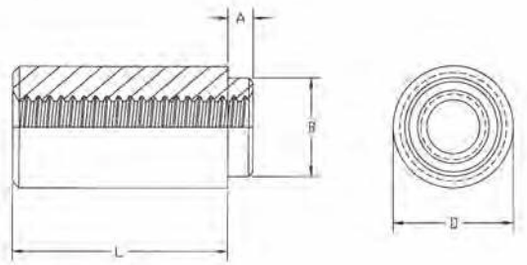

Series	Material	Finish
CRM	Carbon Steel	Electro Tin Plated, ASTM B545, Class A w/ Preservative Coating

Thread: Internal 2B, ANSI B1.1 (6H, ANSI/ASME B1.13M).

Part Number Structure:

CRM- 440 - 4

- Length Code
- Thread Code
- Series

Dimensions & Specifications

INCH (in.)

Thread Size	Series	Thread Code	Thru Hole +.004 -.003	L Length ± .005 in. .062	.125	.250	.375	A Max.	Min.	+.003 -.000	B Max.	D ±.005	Min. Solder Pad ø
#2-56	CRM	256		-2	-4	-8	-12	.060	.060	.147	.142	.219	.244
#4-40	CRM	440		-2	-4	-8	-12	.060	.060	.166	.161	.219	.244
#6-32	CRM	632		-2	-4	-8	-12	.060	.060	.213	.208	.281	.306
#8-32	CRM	832		-2	-4	-8	-12	.060	.060	.250	.245	.344	.369
	CRM		.116	-2	-4	-8	-12	.060	.060	.166	.161	.219	.244
	CRM		.143	-2	-4	-8	-12	.060	.060	.213	.208	.281	.306

METRIC (mm)

Thread Size	Series	Thread Code	Thru Hole +.10 -.08	L Length ± .13 mm 2	3	4	6	8	10	A Max.	Min.	+.08 -.00	B Max.	D ±.13	Min. Solder Pad ø
M2 x 0.4	CRM	M2		-2	-3	-4	-6	-8	-10	1.53	1.53	3.73	3.6	5.56	6.2
M2.5 x 0.45	CRM	M2.5		-2	-3	-4	-6	-8	-10	1.53	1.53	4.22	4.09	5.56	6.2
M3 x 0.5	CRM	M3		-2	-3	-4	-6	-8	-10	1.53	1.53	4.22	4.09	5.56	6.2
M3.5 x 0.6	CRM	M3.5		-2	-3	-4	-6	-8	-10	1.53	1.53	5.41	5.28	7.14	7.77
M4 x 0.7	CRM	M4		-2	-3	-4	-6	-8	-10	1.53	1.53	6.35	6.22	8.74	9.37
	CRM		3.6	-2	-3	-4	-6	-8	-10	1.53	1.53	5.41	5.28	7.14	7.77
	CRM		4.2	-2	-3	-4	-6	-8	-10	1.53	1.53	6.35	6.22	8.74	9.37

Note: All Items Subject To Minimum Order

Number of Parts per Reel / Pitch (mm) for Each Size – as per EIA standards (13" reels/24mm wide)

Thread Size & Thru Hole Size	Length 2	3	4	6	8	10	12
256, 440, 632, .116, .143	1500 / 12	--	1000 / 12	--	650 / 12	--	300 / 16
832	1100 / 16	--	800 / 16	--	500 / 16	--	300 / 16
M2, M2.5, M3, M3.5, 3.6	1500 / 12	1000 / 12	900 / 12	650 / 12	375 / 16	300 / 16	--
M4, 4.2	1100 / 16	800 / 16	675 / 16	500 / 16	375 / 16	300 / 16	--

Spring-Top Standoffs

Series CFKSSB

CFKSSB spring-top standoffs are designed for permanent installation into PC boards by pressing into a drilled or punched hole. The spring-action post provides quick attachment and removal of PC boards, with a simple snap eliminating the problems associated with loose hardware.

Series	Material	Finish
CFKSSB	CDA-360 Brass	None

Use in: PC Boards with Rockwell Hardness B-65 or less.

Part Number Structure:

CFKSSB 156-8

- Length Code
- Hole Diameter
- Series

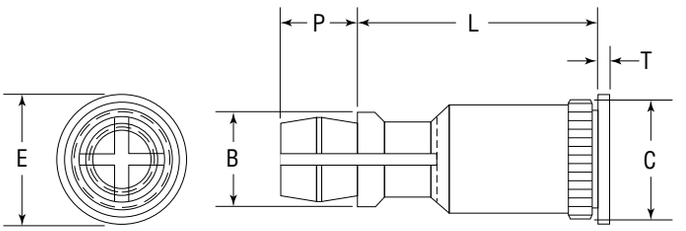

Dimensions & Specifications

INCH (in.) Series	Top Board Mounting Hole Diameter Code	Length L ± .005 in. (Length Code In 32nds Of An Inch) .250	.312	.375	.437	.500	.562	.625	.750	.875	1.000	B ± .005	C ± .003	E ± .005	P ± .005	T ± .005
CFKSSB	156	-8	-10	-12	-14	-16	-18	-20	-24	-28	-32	.188	.226	.250	.141	.020

Dimensions & Specifications

METRIC (mm) Series	Top Board Mounting Hole Diameter Code	Length L ± .13mm (Length Code In Millimeters) 8	10	12	14	16	18	20	22	25	B ± .13	C ± .08	E ± .13	P ± .13	T ± .13
CFKSSB	4 MM	-8	-10	-12	-14	-16	-18	-20	-22	-25	4.77	5.74	6.35	3.58	.51

Continued on next page.

Spring-Top Standoffs

Series CFKSSB

Continued from previous page.

Installation & Performance Data

		Bottom Panel (Fixed)						Top Panel (Removable)			
	Series	Bottom Mounting Hole +.003 –.000	Material	Hardness Max.	Thickness Min.	Min.	Location Tolerance Max.	Top Mounting Hole +.003 –.000	Material	Thickness Range	Min.
INCH (in.)	CFKSSB	.213	PC board	HRB65	.050	.220	± .005	.156	PC board or metal	.040-.070	.100

Installation & Performance Data

		Bottom Panel (Fixed)			Top Panel (Removable)		
	Series	Sheet Thickness & Sheet Material	Installation (lbs.)	Pushout (lbs.)	Max. first on force (lbs.)	Min. first off force (lbs.)	Min. 15th off force (lbs.)
INCH (in.)	CFKSSB	.060 FR-4 Fiberglass	500	110	13	3.0	1.0

Installation & Performance Data

		Bottom Panel (Fixed)						Top Panel (Removable)			
	Series	Bottom Mounting Hole +.08 –.00	Material	Hardness Max.	Thickness Min.	Min.	Location Tolerance Max.	Top Mounting Hole +.08 –.00	Material	Thickness Range	Min.
METRIC (mm)	CFKSSB	5.4	PC board	HRB65	1.25	5.6	± .13	4.0	PC board or metal	1-1.8	2.5

Installation & Performance Data

		Bottom Panel (Fixed)			Top Panel (Removable)		
	Series	Sheet Thickness & Sheet Material	Installation (kN)	Pushout (N)	Max. first on force (N)	Min. first off force (N)	Min. 15th off force (N)
METRIC (mm)	CFKSSB	1.52 FR-4 Fiberglass	2.2	484	58	13	4.0

PC Board Panel Fasteners

Series CPFK

CPFK PC board panel fasteners provide permanent attachment of screw assemblies to PC board substrate material. Screw assemblies remain captive for easy mounting and removal of board.

Series	Material	Finish
CPFK	300 Series Stainless Steel	Passivated ASTM A380

Thread: External 2A, ANSI B1.1 (6g ANSI/ASME B1.13M).*

Use in: PC Boards with Rockwell Hardness of B-70 or less.

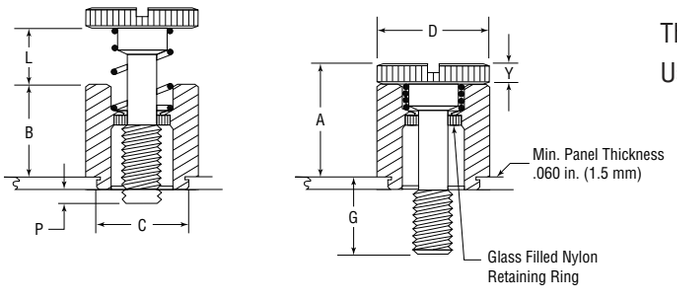

*See Note 3 on Page 6 for Gauging Spec.

Dimensions & Specifications

	Thread Size	Part Number	G ± .016 in. (.4 mm)	P ± .016 in. (.4 mm)	L ± .016 in. (.4 mm)	D +.016 in. (.4mm) -.010 in. (.25 mm)	A Max.	Y ± .005 in. (.13 mm)	B ± .010 in. (.25mm)	C ± .003 in. (.08mm)	+.003 in. (.08 mm) –.000(.00)	Min.
INCH (in.)	#4-40	CPFK440-40	.250	.000	.19	.310	.36	.072	.28	.283	.265	.20
		CPFK440-62	.375	.125								
		CPFK440-84	.500	.250								
	#6-32	CPFK632-40	.250	.000	.19	.340	.36	.072	.28	.299	.281	.26
		CPFK632-62	.375	.125								
		CPFK632-84	.500	.250								
METRIC (mm)	M3 x 0.5	CPFKM3-40	6.4	.0	4.8	7.92	9.15	1.83	7.2	7.19	6.73	5.1
		CPFKM3-62	9.5	3.2								
		CPFKM3-84	12.7	6.4								

Installation & Performance Data

	Thread Size	Fiberglass .060 in. (1.5 mm) Installation Force (lbs.)	Pushout (lbs.)	Torque-out (in.-lbs.)
INCH (in.)	#4-40	250	55	(1)
	#6-32	400	60	(1)
METRIC (mm)	Thread Size	Installation Force (kN)	Pushout (N)	Torque-out (N•m)
	M3	1.1	245	(3)

Low-Profile Panel Fastener

Series LPH

LPH panel fasteners are preassembled for attachment to removable sheet metal panels. Screw assemblies remain captive for servicing ease and provide low profile when secure. Slotted head with deep skirt allows tool or finger operation.

Series	Material	Finish*
LPH	Carbon Steel	Bright Nickel over Copper Flash

*Black Nitride (BN) finish available

Thread: External 2A, ANSI B1.1 (6g ANSI/ASME B1.13M).**
Use in: Materials with Rockwell Hardness of B-60 or less.

Part Number Structure:

LPH-0 440-30

- Length Code
- Thread Code
- Shank Length
- Series

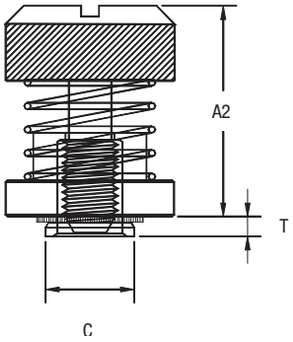

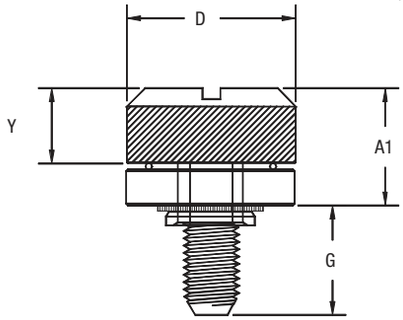

**See Note 3 on Page 6 for Gauging Spec.

Dimensions & Specifications

	Thread Size	Type	Thread Code	Screw Length Code	Min.	T Max.	G ±.015	C Max.	D ±.010	Y ±.005	A1 Max.	A2 Nom.	+.003 -.000	Min.
INCH (in.)	#4-40	LPH-0	440	30	.030	.030	.300	.202	.406	.202	.325	.595	.203	.26
		LPH-1			.040	.038								
		LPH-2			.060	.058								
	#6-32	LPH-0	632	30	.030	.030	.300	.218	.438	.202	.325	.595	.219	.28
		LPH-1			.040	.038								
		LPH-2			.060	.058								
	#8-32	LPH-0	832	30	.030	.030	.300	.249	.468	.207	.330	.600	.250	.29
		LPH-1			.040	.038								
		LPH-2			.060	.058								
	#10-32	LPH-0	1032	30	.030	.030	.300	.311	.530	.220	.335	.605	.312	.33
		LPH-1			.040	.038								
		LPH-2			.060	.058								
	1/4-20	LPH-2	420	35	.060	.058	.350	.374	.625	.242	.385	.675	.375	.38
METRIC (mm)	Thread Size	Type	Thread Code	Screw Length Code	Min.	T Max.	G ±.4	C Max.	D ±.25	Y ±.13	A1 Max.	A2 Nom.	+.08 -.00	Min.
	M3 x 0.5	LPH-0	M3	30	.76	.76	7.62	5.48	10.31	5.13	8.26	15.11	5.5	6.6
		LPH-1			1	.97								
		LPH-2			1.5	1.48								
	M4 x 0.7	LPH-0	M4	30	.76	.76	7.62	6.38	11.89	5.26	8.38	15.24	6.4	7.37
		LPH-1			1	.97								
		LPH-2			1.5	1.48								
	M5 x 0.8	LPH-0	M5	30	.76	.76	7.62	7.98	13.46	5.59	8.51	15.37	8	8.38
		LPH-1			1	.97								
		LPH-2			1.5	1.48								
	M6 x 1	LPH-2	M6	35	1.5	1.48	8.89	9.48	15.88	6.12	9.78	17.15	9.5	9.65

Low-Profile Panel Fastener

Series LPH

Continued from previous page.

Installation & Performance Data

	Type	Thread Code	Sheet Material: 5052-H34 Aluminum — Installation Force (lbs.)	5052-H34 Aluminum — Pushout (lbs.)	Cold-rolled Steel (B-60 Max) — Installaion Force (lbs.)	Cold-rolled Steel (B-60 Max) — Pushout (lbs.)
INCH (in.)	LPH-0	440	2200	64	5000	90
	LPH-1			105		110
	LPH-2			185		300
	LPH-0	632	2400	66	5500	90
	LPH-1			105		130
	LPH-2			190		300
	LPH-0	832	2800	68	6000	90
	LPH-1			110		130
	LPH-2			200		300
	LPH-0	1032	3500	72	8000	95
	LPH-1			150		160
	LPH-2			260		425
	LPH-2	420	4300	320	12000	450

Installation & Performance Data

	Type	Thread Code	Sheet Material: 5052-H34 Aluminum — Installation Force (kN)	5052-H34 Aluminum — Pushout (N)	Cold-rolled Steel (B-60 Max) — Installaion Force (kN)	Cold-rolled Steel (B-60 Max) — Pushout (N)
METRIC (mm)	LPH-0	M3	9.8	285	22.2	400
	LPH-1			465		489
	LPH-2			823		1334
	LPH-0	M4	12.5	302	26.7	400
	LPH-1			489		578
	LPH-2			890		1334
	LPH-0	M5	15.6	320	35.6	423
	LPH-1			667		712
	LPH-2			1156		1890
	LPH-2	M6	19.1	1423	53.4	2002

Pre-Assembled Panel Fasteners

Series CPFC2

CPFC2 panel fasteners provide permanent attachment of screw assemblies to removable sheet metal panels. Pre-assembled screw assemblies remain captive for easy mounting and removal of panel.

Series	Material	Finish
CPFC2	300 Series Stainless Steel	Passivated ASTM A380

Thread: External 2A, ANSI B1.1 (6g, ANSI/ASME B1.13M).
Use in: Materials with Rockwell Hardness B-70 or less.

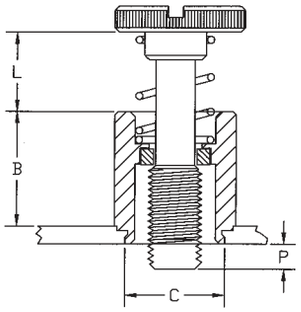

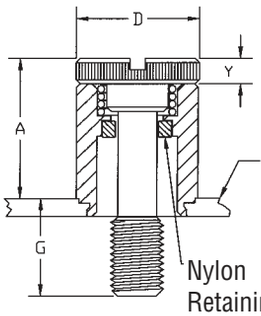

Min. Panel Thickness .060 in. (1.5mm)

Nylon Retaining Ring

Part Number Structure:
CPFC2 440-40
- Length Code
- Thread Code
- Series

Dimensions & Specifications

	Thread Size	Part Number	G ± .016	P ± .016	L ± .016	D +.016 −.010	A Max.	Y ±.005	B ±.010	C Max.	+.003 −.000	Min.
INCH (in.)	#4-40	CPFC2440-40	.250	.000	.19	.31	.36	.072	.28	.264	.265	.25
		CPFC2440-62	.375	.125								
		CPFC2440-84	.500	.250								
	#6-32	CPFC2632-40	.250	.000	.19	.34	.36	.072	.28	.280	.281	.28
		CPFC2632-62	.375	.125								
		CPFC2632-84	.500	.250								
	#8-32	CPFC2832-50	.312	.000	.25	.38	.45	.082	.36	.311	.312	.31
		CPFC2832-72	.437	.125								
		CPFC2832-94	.562	.250								
	#10-32	CPFC21032-50	.312	.000	.25	.41	.45	.082	.36	.343	.344	.34
		CPFC21032-72	.437	.125								
		CPFC21032-94	.562	.250								
	1/4-20	CPFC2420-60	.375	.000	.31	.47	.58	.097	.47	.412	.413	.38
		CPFC2420-82	.500	.125								
		CPFC2420-04	.625	.250								

Continued on next page.

Pre-Assembled Panel Fasteners

Series CPFC2

Continued from previous page.

Dimensions & Specifications

	Thread Size	Part Number	G ± .4	P ± .4	L ± .4	D +.4 −.25	A Max.	Y ± .13	B ± .25	C Max.	+.08 −.00	Min.
METRIC (mm)	M3 x 0.5	CPFC2M3-40	6.4	.0	4.8	7.9	9.1	1.83	7.2	6.7	6.75	6.4
		CPFC2M3-62	9.5	3.2								
		CPFC2M3-84	12.7	6.4								
	M4 x 0.7	CPFC2M4-50	7.9	.0	6.4	9.5	11.4	2.08	9.3	7.9	7.95	7.9
		CPFC2M4-72	11.1	3.2								
		CPFC2M4-94	14.3	6.4								
	M5 x 0.8	CPFC2M5-50	7.9	.0	6.4	10.3	11.4	2.08	9.3	8.7	8.75	8.7
		CPFC2M5-72	11.1	3.2								
		CPFC2M5-94	14.3	6.4								
	M6 x 1.0	CPFC2M6-60	9.5	.0	7.9	11.9	14.6	2.46	12.0	10.5	10.5	9.5
		CPFC2M6-82	12.7	3.2								
		CPFC2M6-04	15.9	6.4								

Installation & Performance Data

		Cold-rolled Steel		5052-H34 Aluminum	
	Thread Size	Installation Force (lbs.)	Pushout (lbs.)	Installation Force (lbs.)	Pushout (lbs.)
INCH (in.)	#4-40	3000	300	2400	240
	#6-32	3500	350	2700	275
	#8-32	3800	400	2900	300
	#10-32	4000	500	3000	400
	1/4-20	5000	600	3500	400
		(kN)	(N)	(kN)	(N)
METRIC (mm)	M3	13.3	1330	10.7	1070
	M4	16.9	1780	12.9	1330
	M5	17.8	2220	13.3	1780
	M6	22.2	2670	15.6	1780

Self-Clinching Standoffs

Series CFSO, CFSOS, CFSOA (Through Threads)

CFSO self-clinching standoffs are designed for quick, easy installation with any standard pneumatic, hydraulic or mechanical press. Through-threaded standoffs are used in metal panels with thickness of .040 in. (1.0 mm) and up. No secondary operation, such as reaming or deburring, is necessary prior to installation.

Series	Material	Finish
CFSO	Heat-treated Carbon Steel	Zinc* Clear
CFSOS	300 Series Stainless Steel	Passivated ASTM A380
CFSOA	7075-T6 Aluminum	None

*See Finish Spec. on Page 6.

Thread: Internal 2B, ANSI B1.1 (6H, ANSI/ASME B1.13M).

Use in: CFSO for materials with Rockwell Hardness of B-80 or less.

CFSOS for materials with Rockwell Hardness of B-70 or less.

CFSOA for materials with Rockwell Hardness of B-50 or less.

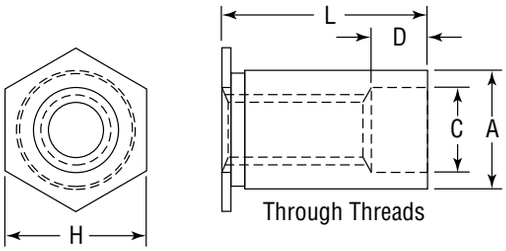

Part Number Structure:

CFSOS 6440-4

- Length Code
- Thread Code
- Body Code (if applicable)
- Series

All Measurements In Inches.

Dimensions & Specifications

Thread Size	Part Number	L Length +.002 -.005 in. .125	.1875	.250	.3125	.375	.4375	.500	.5625	.625	.6875	.750	.8125	.875	.9375	1.00	1.0625	+.003 -.000	A Dim. +.000 -.005	H Hex Dim. (Nom.)	C Counter-bore ±.005	Min.	Min.
#4-40	CFSO CFSOS 440 CFSOA	-4	-6	-8	-10	-12	-14	-16	-18	-20	-22	-24						.166	.165	.1875	.125	.23	.040
#4-40	CFSO CFSOS 6440 CFSOA	-4	-6	-8	-10	-12	-14	-16	-18	-20	-22	-24						.213	.212	.25	.125	.27	.040
D ±.0156		None				.1875				.3125				.4375									

Self-Clinching Standoffs

Series CFSO, CFSOS, CFSOA (Through Threads)

Continued from previous page.

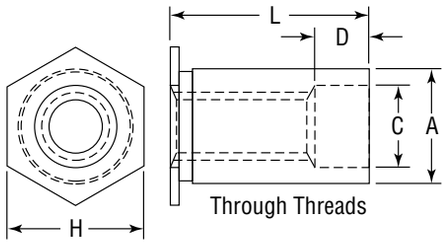

All Measurements In Inches.

Dimensions & Specifications

Thread Size	Part Number	L Length +.002 −.005 in. .125	.1875	.250	.3125	.375	.4375	.500	.5625	.625	.6875	.750	.8125	.875	.9375	1.00	1.0625	+.003 −.000	A Dim. +.000 −.005	H Hex Dim. (Nom.)	C Counter-bore ±.005	Min.	Min.
#6-32	CFSO CFSOS 632 CFSOA	-4	-6	-8	-10	-12	-14	-16	-18	-20	-22	-24	-26	-28	-30	-32	-34	.213	.212	.25	.156	.27	.04
#6-32	CFSO CFSOS 8632 CFSOA	-4	-6	-8	-10	-12	-14	-16	-18	-20	-22	-24	-26	-28	-30	-32	-34	.281	.280	.3125	.156	.31	.05
#8-32	CFSO CFSOS 832 CFSOA	-4	-6	-8	-10	-12	-14	-16	-18	-20	-22	-24	-26	-28	-30	-32	-34	.281	.280	.3125	.188	.31	.05
#10-32	CFSO CFSOS 1032 CFSOA	-4	-6	-8	-10	-12	-14	-16	-18	-20	-22	-24	-26	-28	-30	-32	-34	.281	.280	.3125	.203	.31	.05
D ±.0156		None				.1875				.3125				.4375									

Self-Clinching Standoffs

Series CFSO, CFSOS, CFSOA (Through Threads)

Continued from previous page.

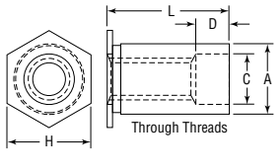

All Measurements In Millimeters.

Dimensions & Specifications

Thread Size	Part Number	L Length +.05 −.13 mm 3	4	6	8	10	12	14	16	18	20	22	25	+.08 −.00	A Dim. +.00 −.13	H Hex Dim. (Nom.)	C Counter-bore ± .13	Min.	Min.
M3x0.5	CFSO CFSOS M3 CFSOA	-3	-4	-6	-8	-10	-12	-14	-16	-18				4.22	4.19	4.8	3.2	6.0	1.0
M3x0.5	CFSO CFSOS 3.5M3 CFSOA	-3	-4	-6	-8	-10	-12	-14	-16	-18				5.41	5.38	6.4	3.2	7.0	1.0
M3.5x0.6	CFSO CFSOS M3.5 CFSOA	-3	-4	-6	-8	-10	-12	-14	-16	-18	-20	-22	-25	5.41	5.38	6.4	4.0	7.0	1.0
M4x0.7	CFSO CFSOS M4 CFSOA	-3	-4	-6	-8	-10	-12	-14	-16	-18	-20	-22	-25	7.14	7.11	7.9	4.8	8.0	1.3
M5x0.8	CFSO CFSOS M5 CFSOA	-3	-4	-6	-8	-10	-12	-14	-16	-18	-20	-22	-25	7.14	7.11	7.9	5.35	8.0	1.3
D ± .4		None				4.0			8.0			11.0							

Self-Clinching Standoffs

Series CFBSO, CFBSOS, CFBSOA (Blind Threads)

CFBSO self-clinching standoffs are designed for quick, easy installation with any standard pneumatic, hydraulic or mechanical press. Blind standoffs are used in metal panels with thickness of .040 in. (1.0 mm) and up. No secondary operation, such as reaming or deburring, is necessary prior to installation.

Series	Material	Finish
CFBSO	Heat-treated Carbon Steel	Zinc* Clear
CFBSOS	300 Series Stainless Steel	Passivated ASTM A380
CFBSOA	7075-T6 Aluminum	None

*See Finish Spec. on Page 6.

Thread: Inernal 2B ANSI B1.1 (6H, ANSI/ASME B1.13M).

Use in: CFBSO for materials with Rockwell Hardness of B-80 or less.

CFBSOS for materials with Rockwell Hardness of B-70 or less.

CFBSOA for materials with Rockwell Hardness of B-50 or less.

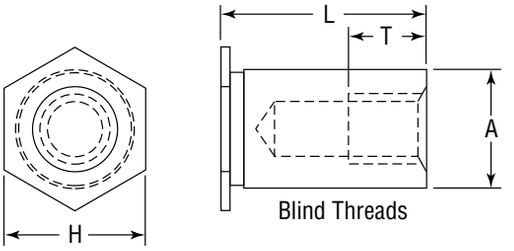

Part Number Structure:

CFBSOS 6440-10

- Length Code
- Thread Code
- Body Code (if applicable)
- Series

All Measurements In Inches.

Dimensions & Specifications

Thread Size	Part Number	L Length +.002 –.005 in. .3125	.375	.4375	.500	.5625	.625	.6875	.750	.8125	.875	.9375	1.00	1.0625	+.003 –.000	A Dim. +.000 –.005	H Hex Dim. (Nom.)	Min.	Min.
#4-40	CFBSO CFBSOS 440 CFBSOA	-10	-12	-14	-16	-18	-20	-22	-24	-26	-28	-30	-32	-34	.166	.165	.1875	.23	.040
#4-40	CFBSO CFBSOS 6440 CFBSOA	-10	-12	-14	-16	-18	-20	-22	-24	-26	-28	-30	-32	-34	.213	.212	.25	.27	.040
T Min.		.1563		.1875	.25			.375											

Self-Clinching Standoffs

Series CFBSO, CFBSOS, CFBSOA (Blind Threads)

Continued from previous page.

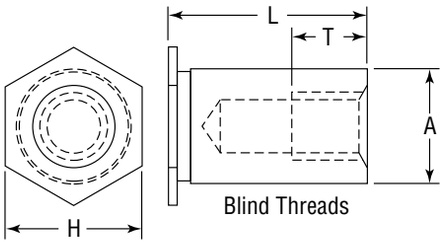

All Measurements In Inches.

Dimensions & Specifications

Thread Size	Part Number	L Length +.002 –.005 in. .3125	.375	.4375	.500	.5625	.625	.6875	.750	.8125	.875	.9375	1.00	1.0625	+.003 –.000	A Dim. +.000 –.005	H Hex Dim. (Nom.)	Min.	Min.
#6-32	CFBSO CFBSOS 632 CFBSOA	-10	-12	-14	-16	-18	-20	-22	-24	-26	-28	-30	-32	-34	.213	.212	.25	.27	.04
#6-32	CFBSO CFBSOS 8632 CFBSOA	-10	-12	-14	-16	-18	-20	-22	-24	-26	-28	-30	-32	-34	.281	.280	.3125	.31	.05
#8-32	CFBSO CFBSOS 832 CFBSOA	-10	-12	-14	-16	-18	-20	-22	-24	-26	-28	-30	-32	-34	.281	.280	.3125	.31	.05
#10-32	CFBSO CFBSOS 1032 CFBSOA	-10	-12	-14	-16	-18	-20	-22	-24	-26	-28	-30	-32	-34	.281	.280	.3125	.31	.05
T Min.		.1563		.1875	.25			.375											

Self-Clinching Standoffs

Series CFBSO, CFBSOS, CFBSOA (Blind Threads)

Continued from previous page.

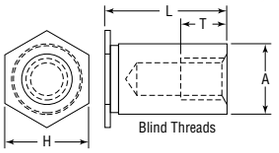

All Measurements In Millimeters.

Dimensions & Specifications

Thread Size	Part Number	L Length +.05 −.13 mm 6	8	10	12	14	16	18	20	22	25	+.08 −.00	A Dim. +.00 −.13	H Hex Dim. (Nom.)	Min.	Min.
M3x0.5	CFBSO CFBSOS M3 CFBSOA		-8	-10	-12	-14	-16	-18	-20	-22	-25	4.22	4.19	4.8	6.0	1.0
M3x0.5	CFBSO CFBSOS 3.5M3 CFBSOA	-6	-8	-10	-12	-14	-16	-18	-20	-22	-25	5.41	5.38	6.4	7.0	1.0
M3.5x0.6	CFBSO CFBSOS M3.5 CFBSOA	-6	-8	-10	-12	-14	-16	-18	-20	-22	-25	5.41	5.38	6.4	7.0	1.0
M4x0.7	CFBSO CFBSOS M4 CFBSOA		-8	-10	-12	-14	-16	-18	-20	-22	-25	7.14	7.11	7.9	8.0	1.3
M5x0.8	CFBSO CFBSOS M5 CFBSOA		-8	-10	-12	-14	-16	-18	-20	-22	-25	7.14	7.11	7.9	8.0	1.3
T Min.		3.2	4.0		5.0	6.5		9.5								

Self-Clinching Standoffs

Series CFSO, CFSOS, CFSOA, CFBSO, CFBSOS & CFBSOA

Continued from previous page.

Installation & Performance Data

	Sheet Material: .060 in. 5052-H34 Aluminum						.060 in. Cold-rolled Steel				
	Thread Code	Standoff Material	Installation Force (lbs.)	Pushout (lbs.)	Torque-out (in.- lbs.)	Pull Through (lbs.)	Installation Force (lbs.)	Pushout (lbs.)	Torque-out (in.- lbs.)	Pull Through (lbs.)	Rec. Tighten Torque Max. (in.- lbs.)
INCH (in.)	440	Steel	1075	155	10	270	2100	220	18	325	4.7
		Stainless Steel	1075	155	10	220	2100	220	18	260	3.6
		Aluminum	1075	155	10	160	nr	nr	nr	nr	2.7
	6440, 632	Steel	1680	290	24	300	3200	410	32	375	4.6, 8.6
		Stainless Steel	1680	290	24	235	3200	410	32	300	3.6, 6.8
		Aluminum	1680	290	24	180	nr	nr	nr	nr	2.7, 5.1
	8632, 832, 1032	Steel	2350	380	44	560	3900	550	72	690	8.6, 17, 30
		Stainless Steel	2350	380	44	450	3900	550	72	550	6.8, 13, 24
		Aluminum	2350	380	44	340	nr	nr	nr	nr	5.2, 10, 17

	Sheet Material: 1.5mm 5052-H34 Aluminum						1.5mm Cold-rolled Steel				
	Thread Code	Standoff Material	Installation Force (kN)	Pushout (N)	Torque-out (N•m)	Pull Through (N)	Installation Force (kN)	Pushout (N)	Torque-out (N•m)	Pull Through (N)	Rec. Tighten Torque Max. (N•m)
METRIC (mm)	M3	Steel	4.7	700	1.2	1230	9.6	990	2.1	1450	.5
		Stainless Steel	4.7	700	1.2	985	9.6	990	2.1	1150	.4
		Aluminum	4.7	700	1.2	740	nr	nr	nr	nr	.3
	3.5M3	Steel	7.4	1310	2.79	1230	14.5	1850	3.9	1450	.5
		Stainless Steel	7.4	1310	2.79	1100	14.5	1850	3.9	1150	.4
		Aluminum	7.4	1310	2.79	810	nr	nr	nr	nr	.3
	M4, M5	Steel	10.5	1750	5.01	2550	17.6	2460	8.45	3100	1.9, 3.4
		Stainless Steel	10.5	1750	5.01	2020	17.6	2460	8.45	2450	1.5, 2.7
		Aluminum	10.5	1750	5.01	1525	nr	nr	nr	nr	1.1, 2.1

nr = Not recommended.

RECOMMENDED INSTALLATION PROCEDURE

1. Insert Standoff through hole in sheet into anvil.
2. Apply only sufficient squeezing force between parallel surfaces of punch an anvil to embed hex head flush in sheet. Avoid excessive pressures.

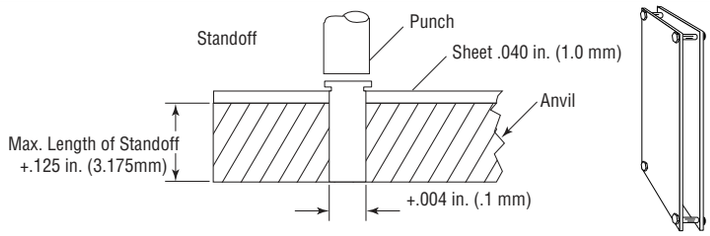

Self-Grounding Standoffs

Series CFSOSG & CFSOAG

CFSOSG & CFSOAG self-grounding standoffs are designed to be installed in steel and aluminum chassis to ground PC boards. Projecting teeth assure excellent electrical contact with PC board circuit and eliminate need for serrated or star washers.

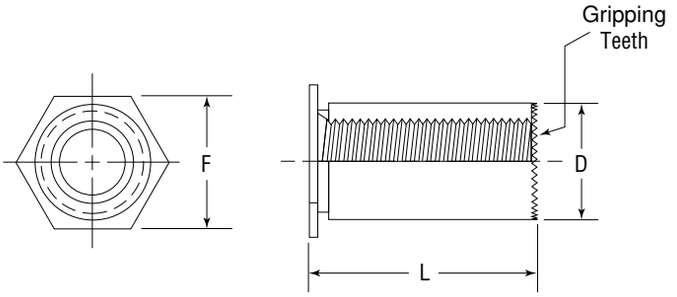

† Not stocked, available on special order.

Series	Material	Finish
CFSOSG	300 Series Stainless Steel	Passivated ASTM A380
CFSOAG	7075-T6 Aluminum	None

Thread: Internal 2B ANSI B1.1 (6H, ANSI/ASME B1.13M).

Use in: CFSOSG for materials with Rockwell Hardness of B-70 or less.

CFSOAG for materials with Rockwell Hardness of B-50 or less.

Dimensions & Specifications

	Thread Size	Part Numbers Stainless	Part Numbers Aluminum	L Length +.010 -.000 in. .125	.187	.250	.312	.375	.437	.500	F Hex Dim. (Nom.)	D +.000 -.005	+.003 –.000	Min.
INCH (in.)	#4-40	CFSOSG6440	CFSOAG6440	-4†	-6	-8	-10	-12	-14	-16	.250	.212	.213	.27
	#6-32	CFSOSG8632	CFSOAG8632	-4†	-6†	-8	-10	-12	-14	-16	.312	.280	.281	.31
	Thread Size	Part Numbers Stainless	Part Numbers Aluminum	L Length +.25 - .00 mm 3	4	6	8	10	12	14	F Hex Dim. (Nom.)	D +.00 -.13	+.08 –.00	Min.
METRIC (mm)	M3x0.5	CFSOSG3.5M3	CFSOAG3.5M3	-3	-4	-6	-8	-10	-12	-14	6.4	5.38	5.4	6.86

Installation & Performance Data

	Thread Size	5052-H34 Aluminum Min.	Installation Force (lbs.)	Pushout (lbs.)	Torque-out (in.-lbs.)
INCH (in.)	#4-40	.040	1500-2000	290	24
	#6-32	.050	1500-2000	380	44
METRIC (mm)	Thread Size	Min.	Installation Force (kN)	Pushout (N)	Torque-out (N•m)
	M3	1.0	8	1290	2.7

Self-Clinching Standoffs

Series CF40 & CF40S (Miniature Standoff)

CF40 & CF40S MIniature Standoffs are designed to be used in limited space applications. They are ideal for securing D-sub connectors to enclosure backplanes and provide a flush mounting surface for RFI/EMI gaskets.

Series	Material	Finish
CF4O	Heat-treated Carbon Steel	Zinc* Yellow
CF4OS	300 Series Stainless Steel	Passivated ASTM A380

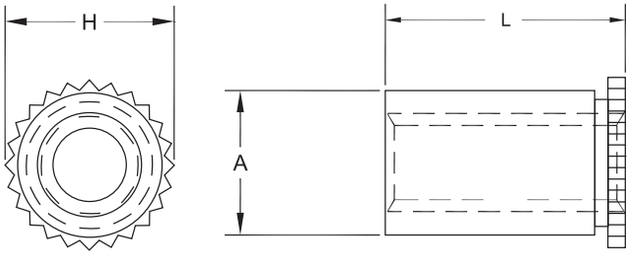

*See Finish Spec. on Page 6.

Thread: Internal 2B ANSI B1.1 (6H, ANSI/ASME B1.13M).

Use in: CF40 for Material with HRB-80 or less.
CF40S for Material with HRB-70 or less.

Part Number Structure:

CF40 - 440 - .250

- .250 → Length Code
- 440 → Thread Code
- CF40 → Series

All Measurements In Inches.

Dimensions & Specifications

Thread Size	Part Number: Steel	Part Number: Stainless Steel	L Length +.002 -.005 in.		+.003 -.000	A Dim. Max.	H Dim. (Nom.)	Min.	Min.
#4-40	CF40-440	CF40S-440	-.250	-.275	.166	.165	.194	.126	.037-.250

All Measurements In Millimeters.

Dimensions & Specifications

Thread Size	Part Number: Steel	Part Number: Stainless Steel	L Length +.05 -.13mm		+.08 -.00	A Dim. Max.	H Dim. (Nom.)	Min.	Min.
M3	CF40-M3	CF40S-M3	-6.35	-7	4.22	4.2	4.92	3.2	.94-6.35

Self-Clinching Standoffs

Series CF40 & CF40S (Miniature Standoff)

Continued from previous page.

Installation & Performance Data

INCH (in.)

Sheet Material: .040 in. Cold-rolled Steel						*Sheet Material: .040 in. 5052-H34 Aluminum*					
Thread Code	**Material**	**Installation Force (lbs.)**	**Pushout (lbs.)**	**Torque-out (in.-lbs.)**	**Rec. Tightening Torque Max. (in.-lbs.)**	**Thread Code**	**Material**	**Installation Force (lbs.)**	**Pushout (lbs.)**	**Torque-out (in.-lbs.)**	**Rec. Tightening Torque Max. (in.-lbs.)**
440	Steel	1300	70	9	3.8	440	Steel	1000	45	9	3.8
	Stainless Steel	1300	70	9	3.8		Stainless Steel	1000	45	9	3.8

METRIC (mm)

Sheet Material: 1mm Cold-rolled Steel						*Sheet Material: 1mm 5052-H34 Aluminum*					
Thread Code	**Material**	**Installation Force (kN)**	**Pushout (N)**	**Torque-out (N•m)**	**Rec. Tightening Torque Max. (N•m)**	**Thread Code**	**Material**	**Installation Force (kN)**	**Pushout (N)**	**Torque-out (N•m)**	**Rec. Tightening Torque Max. (N•m)**
M3	Steel	5.8	330	1.0	.44	M3	Steel	4.5	220	1.0	.44
	Stainless Steel	5.8	330	1.0	.44		Stainless Steel	4.5	220	1.0	.44

Self-Clinching Standoffs

Series CF4-SO
(400 Series Standoffs)

CF4-SO Standoffs are designed to be pressed into round holes in stainless steel material as thin as .040 (1mm). The through-hole versions are available in a choice of inch and metric sizes.

Series	Material	Finish
CF4-SO	400 Series Stainless Steel	Passivated ASTM A380

Thread: Internal 2B, ANSI B1.1 (6H, ANSI/ASME B1.13M).
Use in: Materials with Rockwell Hardness of B88 or less.

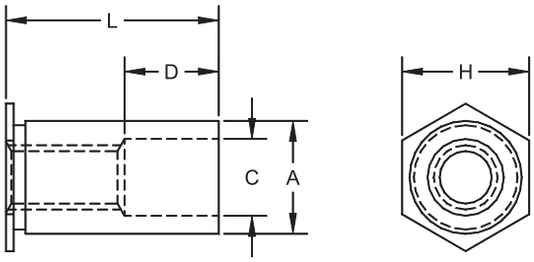

Through Threads

Part Number Structure:

CF4-SO 6440-4

- Length Code
- Thread Code
- Body Code (if Applicable)
- Body Type
- Series

All Measurements In Inches.

Dimensions & Specifications

Thread Size	Part Number	L Length +.002 -.005 in. .125	.187	.250	.312	.375	.437	.500	.562	.625	.687	.750	.812	.875	.937	1.00	1.062	+.003 -.000	A Dim. +.000 -.005	H Hex Dim. (Nom.)	C Counter-bore ±.005	Min.	Min.
#4-40	CF4-SO 440	-4	-6	-8	-10	-12	-14	-16	-18	-20	-22	-24						.166	.165	.187	.125	.23	.040
	CF4-SO 6440	-4	-6	-8	-10	-12	-14	-16	-18	-20	-22	-24						.213	.212	.250	.125	.28	.040
#6-32	CF4-SO 632	-4	-6	-8	-10	-12	-14	-16	-18	-20	-22	-24	-26	-28	-30	-32	-34	.213	.212	.250	.156	.28	.040
	CF4-SO 8632	-4	-6	-8	-10	-12	-14	-16	-18	-20	-22	-24	-26	-28	-30	-32	-34	.281	.280	.312	.156	.33	.050
#8-32	CF4-SO 832	-4	-6	-8	-10	-12	-14	-16	-18	-20	-22	-24	-26	-28	-30	-32	-34	.281	.280	.312	.188	.33	.050
#10-32	CF4-SO 1032	-4	-6	-8	-10	-12	-14	-16	-18	-20	-22	-24	-26	-28	-30	-32	-34	.281	.280	.312	.203	.33	.050
D ± .0156		None				.187				.312				.437									

All Measurements In Millimeters.

Thread Size	Part Number	L Length +.05 -.13 mm 3	4	6	8	10	12	14	16	18	20	22	25	+.08 -.00	A Dim. +.00 -.13	H Hex Dim. (Nom.)	C Counter-bore ±.13	Min.	Min.
M3x0.5	CF4-SO M3	-3	-4	-6	-8	-10	-12	-14	-16	-18				4.22	4.2	4.8	3.25	6	1.02
	CF4-SO 3.5M3	-3	-4	-6	-8	-10	-12	-14	-16	-18				5.41	5.39	6.4	3.25	7.1	1.02
M3.5x0.6	CF4-SO M3.5	-3	-4	-6	-8	-10	-12	-14	-16	-18	-20	-22	-25	5.41	5.39	6.4	3.9	7.1	1.02
M4x0.7	CF4-SO M4	-3	-4	-6	-8	-10	-12	-14	-16	-18	-20	-22	-25	7.14	7.12	7.9	4.8	8.4	1.27
M5x0.8	CF4-SO M5	-3	-4	-6	-8	-10	-12	-14	-16	-18	-20	-22	-25	7.14	7.12	7.9	5.35	8.4	1.27
D ± .4		None				4.0			8.0			11.0							

Continued on next page.

Self-Clinching Standoffs

Series CF4-BSO
(400 Series Blind Standoffs)

Continued from previous page.

CF4-BSO Standoffs are designed to be pressed into round holes in stainless steel material as thin as .040 (1mm). The blind-hole versions are available in a choice of inch and metric sizes.

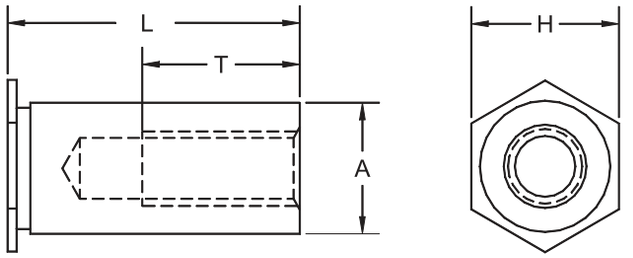

Blind Threads

Series	Material	Finish
CF4-BSO	400 Series Stainless Steel	Passivated ASTM A380

Thread: Internal 2B, ANSI B1.1 (6H, ANSI/ASME B1.13M).

Use in: Materials with Rockwell Hardness of B88 or less.

Part Number Structure:

CF4-BSO 6440-10

- Length Code
- Thread Code
- Body Code
- Body Type
- Series

All Measurements In Inches.

Dimensions & Specifications

Thread Size	Part Number	L Length +.002 -.005 in. .312	.375	.437	.500	.562	.625	.687	.750	.812	.875	.937	1.00	1.062	+.003 -.000	A Dim. +.000 -.005	H Hex Dim. (Nom.)	Min.	Min.
#4-40	CF4-BSO 440	-10	-12	-14	-16	-18	-20	-22	-24						.166	.165	.187	.23	.040
	CF4-BSO 6440	-10	-12	-14	-16	-18	-20	-22	-24	-26	-28	-30	-32	-34	.213	.212	.250	.28	.040
#6-32	CF4-BSO 632	-10	-12	-14	-16	-18	-20	-22	-24	-26	-28	-30	-32	-34	.213	.212	.250	.28	.040
	CF4-BSO 8632	-10	-12	-14	-16	-18	-20	-22	-24	-26	-28	-30	-32	-34	.281	.280	.312	.33	.050
#8-32	CF4-BSO 832	-10	-12	-14	-16	-18	-20	-22	-24	-26	-28	-30	-32	-34	.281	.280	.312	.33	.050
#10-32	CF4-BSO 1032	-10	-12	-14	-16	-18	-20	-22	-24	-26	-28	-30	-32	-34	.281	.280	.312	.33	.050
T Dim. Min.		.156		.187	.250			.375											

All Measurements In Millimeters.

Thread Size	Part Number	L Length +.05 -.13 mm 6	8	10	12	14	16	18	20	22	25	+.08 -.00	A Dim. +.00 -.13	H Hex Dim. (Nom.)	Min.	Min.
M3x0.5	CF4-BSO M3	-6	-8	-10	12	-14	-16	-18				4.22	4.2	4.8	6	1.02
	CF4-BSO 3.5M3	-6	-8	-10	12	-14	-16	-18				5.41	5.39	6.4	7.1	1.02
M3.5x0.6	CF4-BSO M3.5	-6	-8	-10	12	-14	-16	-18	-20	-22	-25	5.41	5.39	6.4	7.1	1.02
M4x0.7	CF4-BSO M4	-6	-8	-10	12	-14	-16	-18	-20	-22	-25	7.14	7.12	7.9	8.4	1.27
M5x0.8	CF4-BSO M5	-6	-8	-10	12	-14	-16	-18	-20	-22	-25	7.14	7.12	7.9	8.4	1.27
T Dim. Min.		3.2	4.0		5.0	6.5		9.5								

Continued from previous page.

Self-Clinching Standoffs

Series CF4-SO, CF4-BSO (400 Series Standoffs)

Dimensions & Specifications

INCH (in.)	Sheet Material: .050 in. 300 Series Stainless Steel					
	Thread Code	Installation Force (lbs.)	Pushout (lbs.)	Torque-out (in.-lbs.)	Pull Through (lbs.)	Rec. Tightening Torque Max. (in.-lbs.)
	440	5500	330	16	595	4.75
	6440	9500	640	29	675	4.75
	632	9500	640	29	675	8.75
	8632	10500	895	70	1390	8.75
	832	10500	895	70	1515	18
	1032	10500	895	70	1365	32

METRIC (mm)	Sheet Material: 1.3mm 300 Series Stainless Steel					
	Thread Code	Installation Force (kN)	Pushout (N)	Torque-out (N•m)	Pull Through (N)	Rec. Tightening Torque Max. (N•m)
	M3	24.5	1467	1.81	2645	.55
	3.5 M3	42.3	2847	3.00	3000	.55
	M3.5	42.3	2847	3.00	3000	.91
	M4	46.7	3981	8.85	6450	2
	M5	46.7	3981	8.85	6070	3.6

RECOMMENDED INSTALLATION PROCEDURE

1. Insert Standoff through hole in sheet into anvil.
2. Apply sufficient squeezing force between parallel surfaces of punch an anvil to embed hex head flush in sheet. Avoid excessive pressure.

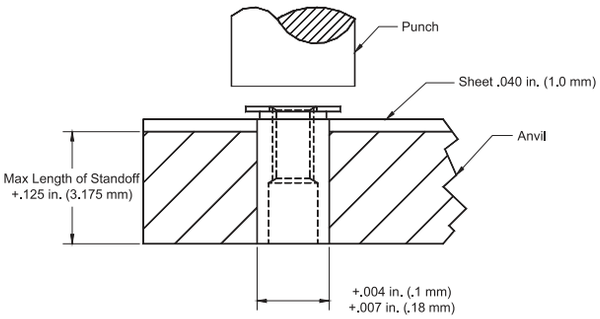

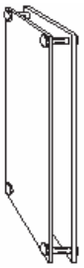

Self-Clinching Slide-Top Standoffs

Series CFSKC

CFSKC slide-top standoffs are designed for a PC board or panel to be quickly attached and removed with a simple sliding motion. The slide-top standoffs provide advantages for reducing servicing time and eliminate the problems associated with loose hardware. Several slide-top standoffs can be used in conjunction with a Captive threaded standoff to lock the board in place.

Series	Material	Finish
CFSKC	300 Series Stainless Steel	Passivated ASTM A380

Use in: Materials HRB-70 or less.

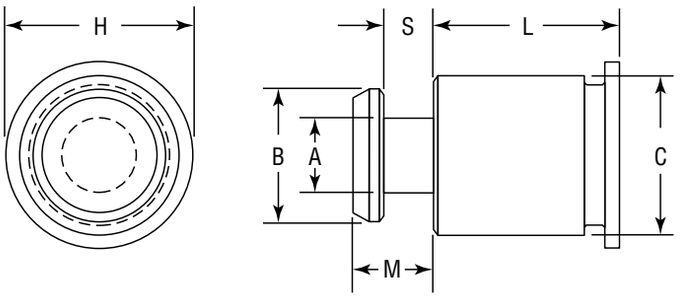

Part Number Structure:

CFSKC 6060-6

- Length Code
- Body/Hole Code
- Series

Dimensions & Specifications

INCH (in.) Series	Body/ Hole Code	L Length ± .005 in. Length Code is in 32nds of an Inch .188	.250	.312	.375	.437	.500	.562	.625	.750	.875	1.00	A ± .003	B ± .003	C Max.	S ± .003	M Max.	H Nom.	Anvil Hole Dia. + .003 – .000
CFSKC	6060	-6	-8	-10	-12	-14	-16	-18	-20	-24	-28	-32	.099	.177	.212	.068	.108	.250	.216

Dimensions & Specifications

METRIC (mm) Series	Body/ Hole Code	L Length ± .13mm. 6	8	10	12	14	16	18	20	22	25	A ± .08	B ± .08	C Max.	S ± .08	M Max.	H Nom.	Anvil Hole Dia. + .08 – .00
CFSKC	61.5	-6	-8	-10	-12	-14	-16	-18	-20†	-22†	-25†	2.5	4.5	5.38	1.72	2.75	6.35	5.5

† Not stocked, available on special order.

Installation & Performance Data

	Body Size/ Hole Code	.060 in. (1.52mm) 5052-H34 Aluminum Installation (lbs.)	Pushout (lbs.)	.060 in. (1.52mm) Cold-rolled Steel Installation (lbs.)	Pushout (lbs.)
INCH (in.)	6060	1600	250	3200	600
METRIC (mm)		(kN)	(N)	(kN)	(N)
METRIC (mm)	61.5	7.1	1100	14.2	2600

Self-Clinching Slide-Top Standoffs

Series CFSKC

Continued from previous page.

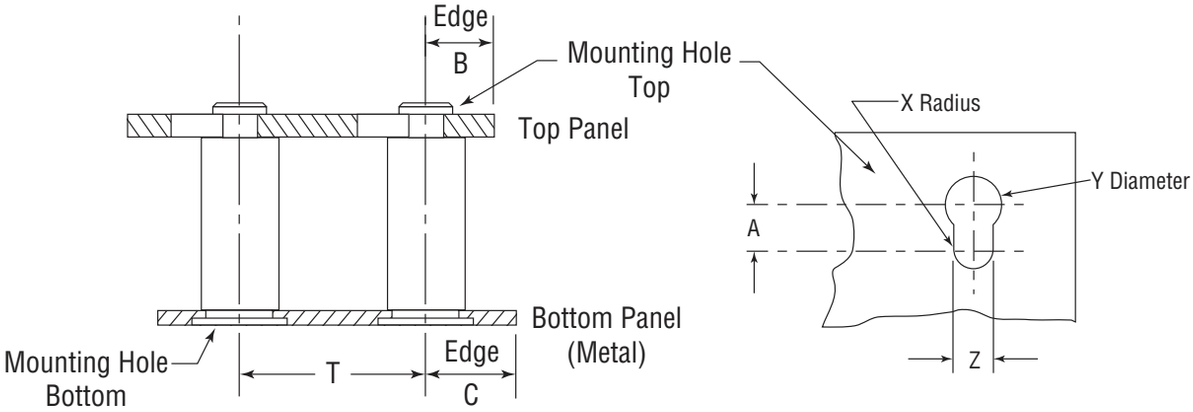

Installation & Performance Data

INCH (in.)	Bottom Panel					Top Panel						
						Top Mounting Hole						
Series	Bottom Mounting Hole +.003 –.000	Min.	C Min.	Location Tolerance T Max.	X Nom.	Y ± .003	Z ± .003	A Min.	Material	Thickness Range	B Min.
CFSKC	.213	.040	.260	± .005	.059	.197	.118	.148	PC Board or Metal	.057 - .064	.160

Installation & Performance Data

METRIC (mm)	Bottom Panel					Top Panel						
						Top Mounting Hole						
Series	Bottom Mounting Hole +.08 –.00	Min.	C Min.	Location Tolerance T Max.	X Nom.	Y ± .08	Z ± .08	A Min.	Material	Thickness Range	B Min.
CFSKC	5.4	1.0	6.6	± .13	1.5	5.0	3.0	3.75	PC Board or Metal	1.45 - 1.62	4.1

Male Self-Clinching Standoffs

Series CFMS

NEW

CFMS Standoffs provide a permanently captivated fastener with a reusable threaded post to mount PC boards and other components in electronic displays. The unique part is available in heat-treated and zinc plated steel or passivated stainless steel and can be installed into metal sheets as thin as .050 in (1.27 mm) thick.

Series	Material	Finish
CFMS	Heat-treated Carbon Steel	Zinc Clear per ASTM B633
CFMSS	300 Series Stainless Steel	Passivated ASTM A380

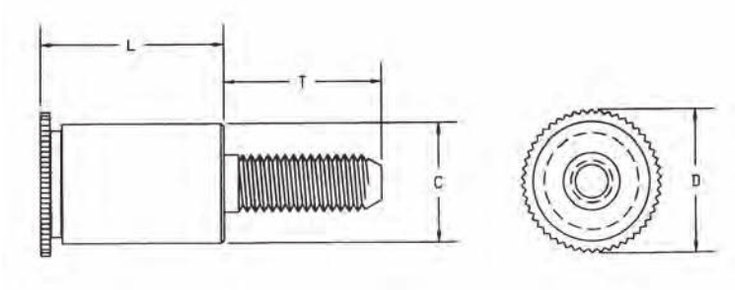

Thread: External 2A, ANSI B1.1 (6g, ANSI/ASME B1.13M).*

Use in: CFMS for materials with HRB-80 or less.
CFMSS for materials with HRB-70 or less.

Part Number Structure:

CFMS 632 - 6

- Length Code
- Thread Code
- Series

See Note 3 on Page 6 for Gauging Spec.

Dimensions & Specifications

INCH (in.)	Thread Size	Part Number Steel	Part Number Stainless	Thread Code	L Length ±.015 in. .375	.437	.500	Min.	+.003 -.000	T ±.005	D ±.005	C Max.
	#6-32	CFMS	CFMSS	632	-6	-7	-8	.050	.250	.312	.303	.249
	#6-32	CFMS	CFMSS	8632	-6	-7	-8	.050	.281	.375	.334	.280

Dimensions & Specifications

METRIC (mm)	Thread Size	Part Number Steel	Part Number Stainless	Thread Code	L Length ±.4 mm 8	10	12	Min.	+.08 -.00	T ±.13	D ±.13	C Max.
	M3.5x0.6	CFMS	CFMSS	M3.5	-8	-10	-12	1.27	6.35	7.92	7.70	6.32
	M3.5x0.6	CFMS	CFMSS	4M3.5	-8	-10	-12	1.27	7.14	9.52	8.49	7.12

Note: All items subject to minimum order

Unthreaded Thru-Hole Standoffs

Series CFSO, CFSOS & CFSOA

CFSO self-clinching standoffs are designed for quick, simple installation with any standard press into a drilled or punched hole, and become permanently attached to the thin sheet metal material. They are primarily used to provide spacing of multi-panel assemblies. The unthreaded hole allows threaded studs to pass directly through the spacer to lower areas.

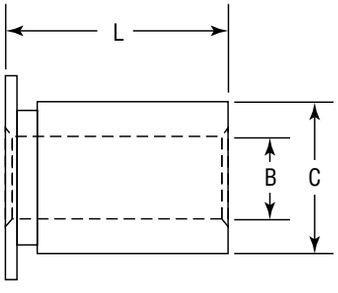

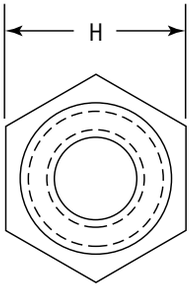

Series	Material	Finish
CFSO	Heat-treated Carbon Steel	Zinc* Clear
CFSOS	300 Series Stainless Steel	Passivated ASTM A380
CFSOA	7075-T6 Aluminum	None

*See Finish Spec. on Page 6.

Use in: CFSO for materials with Rockwell Hardness of B-80 or less.

CFSOS for materials with Rockwell Hardness of B-70 or less.

CFSOA for materials with Rockwell Hardness of B-50 or less.

Part Number Structure:

CFSO 4116-4

- Length Code
- Body/Hole Code
- Series

All Measurements In Inches.

Dimensions & Specifications

B +.004 -.003 Thru-Hole Diameter	Part Number	L Length +.002 –.005 in. .125	.1875	.250	.3125	.375	.4375	.500	.5625	.625	.6875	.750	+.003 –.000	C +.000 –.005	H Hex Dim.	Min.	Min.
.116	CFSO CFSOS4116 CFSOA	-4	-6	-8	-10	-12	-14	-16	-18	-20	-22	-24	.166	.165	.187	.23	.040
.116	CFSO CFSOS 6116 CFSOA	-4	-6	-8	-10	-12	-14	-16	-18	-20	-22	-24	.213	.212	.250	.27	.040
.143	CFSO CFSOS 6143 CFSOA	-4	-6	-8	-10	-12	-14	-16	-18	-20	-22	-24	.213	.212	.250	.27	.040
.143	CFSO CFSOS 8143 CFSOA	-4	-6	-8	-10	-12	-14	-16	-18	-20	-22	-24	.281	.280	.312	.31	.050
.169	CFSO CFSOS 8169 CFSOA	-4	-6	-8	-10	-12	-14	-16	-18	-20	-22	-24	.281	.280	.312	.31	.050
.194	CFSO CFSOS 8194 CFSOA	-4	-6	-8	-10	-12	-14	-16	-18	-20	-22	-24	.281	.280	.312	.31	.050

Unthreaded Thru-Hole Standoffs

Series CFSO, CFSOS & CFSOA

Continued from previous page.

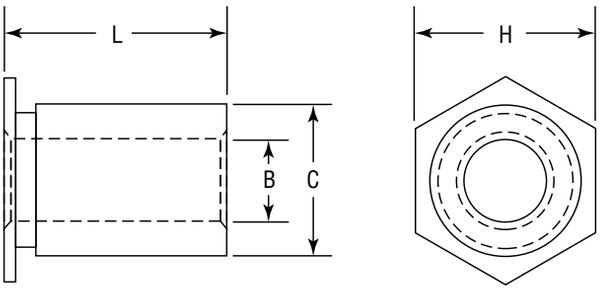

All Measurements In Millimeters.

Dimensions & Specifications

B +.10 -.08 Thru-Hole Diameter	Part Number	L Length +.05 –.13 mm 3	4	6	8	10	12	14	16	18	20	+.08 –.00	C +.00 –.13	H Hex Dim.	Min.	Min.
3.1	CFSO CFSOS 43.1 CFSOA	-3	-4	-6	-8	-10	-12	-14	-16	-18	-20	4.2	4.19	4.8	6	1.02
3.1	CFSO CFSOS 63.1 CFSOA	-3	-4	-6	-8	-10	-12	-14	-16	-18	-20	5.4	5.38	6.4	6.8	1.02
3.6	CFSO CFSOS 63.6 CFSOA	-3	-4	-6	-8	-10	-12	-14	-16	-18	-20	5.4	5.38	6.4	6.8	1.02
3.6	CFSO CFSOS 83.6 CFSOA	-3	-4	-6	-8	-10	-12	-14	-16	-18	-20	7.2	7.11	7.9	8	1.27
4.1	CFSO CFSOS 84.1 CFSOA	-3	-4	-6	-8	-10	-12	-14	-16	-18	-20	7.2	7.11	7.9	8	1.27
5.1	CFSO CFSOS 85.1 CFSOA	-3	-4	-6	-8	-10	-12	-14	-16	-18	-20	7.2	7.11	7.9	8	1.27

Standoffs For Thin Sheet Material

Series CFT, CFTS, CFTA

CFT standoffs allow flush-head installation in a material thickness of .025 in. (.63mm) or more.

Series	Material	Finish
CFT	Non-Heat-treated Carbon Steel	Zinc* Clear
CFTS	300 Series Stainless Steel	Passivated ASTM A380
CFTA	7075-T6 Aluminum	None

*See Finish Spec. on Page 6.

Thread: Internal 2B, ANSI B1.1.
Use In: CFT – Materials with HR of B-60 or less.
CFTS – Materials with HR of B-70 or less.
CFTA – Materials with HR of B-50 or less.

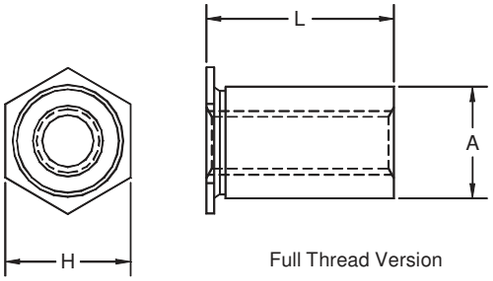

Full Thread Version

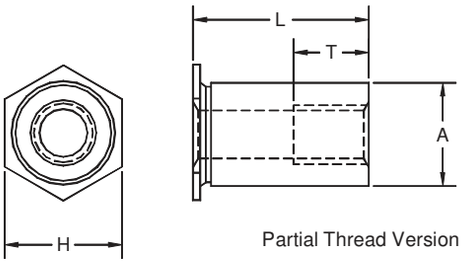

Partial Thread Version

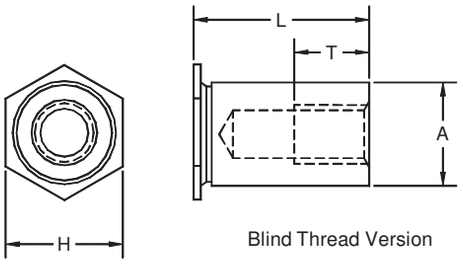

Blind Thread Version

Part Number Structure:

CFT 440-.090

- Length Code
- Thread Code
- Series

Dimensions & Specifications

	Thread Size	Part Number	L Length ± .003 in. .090	.125	.187	.250	.312	.375	.437	.500	.562	.625	.687	.750	+.003 -.000	A +.000 -.005	H Nom.	T Min.	Min.	Min.
INCH (in.)	#2-56	CFT CFTS 256 CFTA	-.090	-.125	-.187	-.250	-.312	-.375	-.437	-.500	-.562	-.625	-.687	-.750	.166	.165	.187	.200	.23	.025
		CFT CFTS 6256 CFTA	-.090	-.125	-.187	-.250	-.312	-.375	-.437	-.500	-.562	-.625	-.687	-.750	.213	.212	.250		.27	.025
	#4-40	CFT CFTS 440 CFTA	-.090	-.125	-.187	-.250	-.312	-.375	-.437	-.500	-.562	-.625	-.687	-.750	.166	.165	.187	.220	.23	.025
		CFT CFTS 6440 CFTA		-.125	-.187	-.250	-.312	-.375	-.437	-.500	-.562	-.625	-.687	-.750	.213	.212	.250		.27	.025
	#6-32	CFT CFTS 632 CFTA		-.125	-.187	-.250	-.312	-.375	-.437	-.500	-.562	-.625	-.687	-.750	.213	.212	.250	.270	.27	.025
Version			Full Thread					Partial Thread			Blind Thread									

Note: Items may be subject to minimum order.

Standoffs For Thin Sheet Material

Series CFT, CFTS & CFTA

Continued from previous page.

CFT standoffs allow flush-head installation in a material thickness of .025 in. (.63mm) or more.

Series	Material	Finish
CFT	Non-Heat-treated Carbon Steel	Zinc* Clear
CFTS	300 Series Stainless Steel	Passivated ASTM A380
CFTA	7075-T6 Aluminum	None

*See Finish Spec. on Page 6.

Thread: Internal 6H, ANSI/ASME B1.13M.
Use In: CFT – Materials with HR of B-60 or less.
CFTS – Materials with HR of B-70 or less.
CFTA – Materials with HR of B-50 or less.

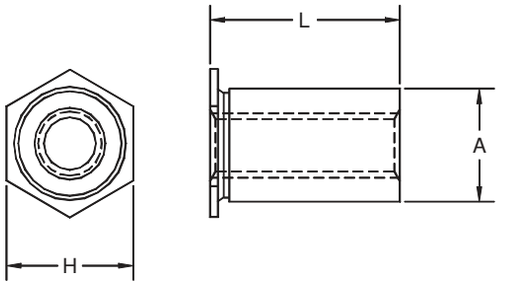

Full Thread Version

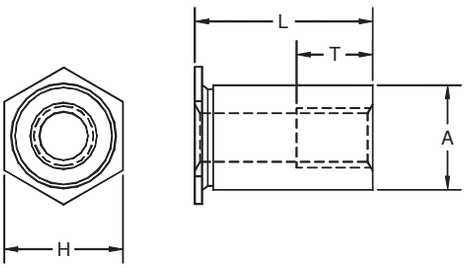

Partial Thread Version

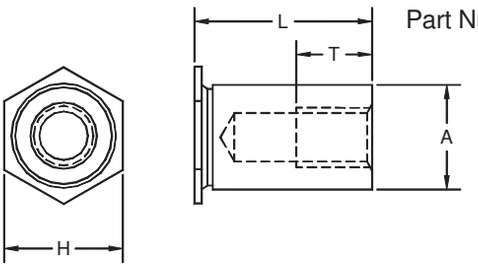

Blind Thread Version

Part Number Structure:

CFT M2.5-200

- Length Code
- Thread Code
- Series

Dimensions & Specifications

	Thread Size	Part Number	L Length ±.08 mm 2.00	3.00	4.00	6.00	8.00	10.00	12.00	14.00	16.00	18.00	19.00	+.08 -.00	A +.00 -.13	H Nom.	T Min.	Min.	Min.
METRIC (mm)	M2.5x0.45	CFT CFTS CFTA M2.5	-200	-300	-400	-600	-800	-1000	-1200	-1400	-1600	-1800	-1900	4.2	4.19	4.8	5.2	5.8	.63
		CFT CFTS CFTA 6M2.5	-200	-300	-400	-600	-800	-1000	-1200	-1400	-1600	-1800	-1900	5.4	5.38	6.4		7.1	.63
	M3x0.5	CFT CFTS CFTA M3	-200	-300	-400	-600	-800	-1000	-1200	-1400	-1600	-1800	-1900	4.2	4.19	4.8	6.2	5.8	.63
		CFT CFTS CFTA 6M3	-200	-300	-400	-600	-800	-1000	-1200	-1400	-1600	-1800	-1900	5.4	5.38	6.4		7.1	.63
	M3.5x0.6	CFT CFTS CFTA M3.5		-300	-400	-600	-800	-1000	-1200	-1400	-1600	-1800	-1900	5.4	5.38	6.4	7.0	7.1	.63
Version			Full Thread					Partial Thread		Blind Thread									

Note: Items may be subject to minimum order.

Standoffs For Thin Sheet Material

Series CFT, CFTS, CFTA

Continued from previous page.

Installation & Performance Data

A Dim.	Series	Sheet Material											
		.025 in. (.64mm) 5052-H-34 Aluminium						.025 in. (.64mm) Cold-rolled Steel					
		Installation		Pushout		Torque-out		Installation		Pushout		Torque-out	
		lbs.	kN	lbs.	N	in.-lbs.	N•m	lbs.	kN	lbs.	N	in.-lbs.	N•m
.165 in. (4.19mm)	CFT CFTS CFTA	1500	6.7	68	302	5	.56	2000	8.9	98	435	8	.90
								-	-	-	-	-	-
.212 in. (5.38 mm)	CFT CFTS CFTA	1800	8	88	391	10	1.13	2500	11.1	148	658	14	1.6
								-	-	-	-	-	-

The installation and performance data listed are nominal when all specifications are adhered to. Changes in sheet hardness and mounting hole tolerance will affect performance. Therefore, we recommend testing the product in your application to determine actual results. Samples are available upon request.

Installation

1. Prepare the required size hole in the base material by punching or drilling. Do not deburr hole.
2. Place standoff through hole in material and into installation anvil and squeeze into place using a shop press with flat punch.
3. Apply a sufficient force to seat the hex head flush into the base material.
4. Use chamfered anvil shown for sheet thickness of .025 to .032 in. (.63 to .81 mm) for sheets over .032 (.81 mm) The special anvil is not required.

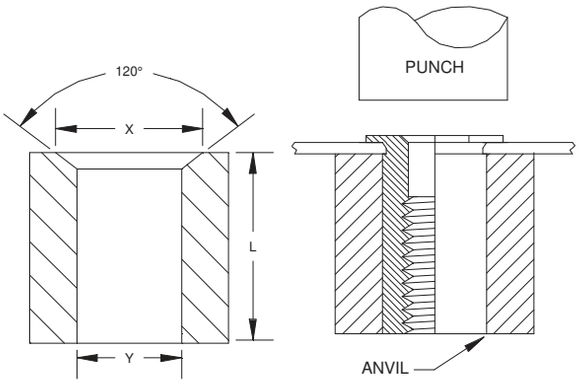

Standoff A Dimension	Anvil Dimensions			
	Y		X	
	Inches	mm	Inches	mm
.165 in./4.19mm	.167 - .170	4.24 - 4.32	.187 - .194	4.75 - 4.93
.212 in./5.38mm	.213 - .216	5.41 - 5.49	.250 - .257	6.35 - 6.53

Spring-Top Standoffs

Series CFSSA, CFSSS & CFSSC

CFSSA, CFSSS & CFSSC spring-top standoffs are designed for permanent installation into sheet metal by pressing into a prepared hole. The spring-action post provides quick attachment and removal with a simple snap eliminating the problems associated with loose hardware.

Series	Material	Finish
CFSSA	7075-T6 Aluminum	Plain
CFSSS	Carbon Steel	Zinc* Clear
CFSSC	400 Series Stainless Steel	Passivated ASTM A380

*See Finish Spec. on Page 6.

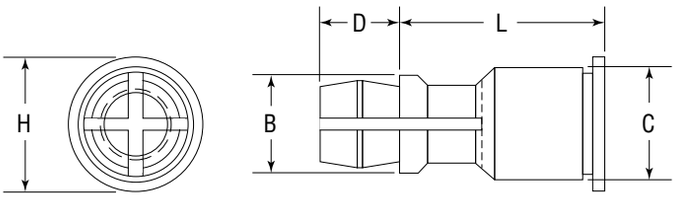

Use in: CFSSA – Cold-rolled Steel HRB-50 or less.
CFSSS – Cold-rolled Steel HRB-60 or less.
CFSSC – Cold-rolled Steel HRB-70 or less.

Part Number Structure:

CFSSA 156-8

- Length Code
- Hole Diameter
- Series

Dimensions & Specifications

	Series	Top Panel Mounting Hole Diameter Code	L Length ± .005 in. (Length Code in 32nds of an inch) .250	.312	.375	.437	.500	.562	.625	.750	.875	1.000	B ± .005	C Max.	D ± .005	H ± .005
INCH (in.)	CFSSA CFSSC CFSSS	156	-8	-10	-12	-14	-16	-18	-20	-24	-28	-32	.188	.212	.141	.250

Dimensions & Specifications

	Series	Top Panel Mounting Hole Diameter Code	L Length ± .13 mm (Length Code is in millimeters) 8	10	12	14	16	18	20	22	25	B ± .13	C Max.	D ± .13	H ± .13
METRIC (mm)	CFSSA CFSSC CFSSS	4MM	-8	-10	-12	-14	-16	-18	-20	-22	-25	4.77	5.38	3.58	6.35

Continued on next page.

Spring-Top Standoffs

Series CFSSA, CFSSS & CFSSC

Continued from previous page.

Installation & Performance Data

		Bottom Panel (Fixed)						Top Panel (Removable)			
	Series	Bottom Mounting Hole +.003 –.000	Material	Hardness Max.	Thickness Min.	Min.	Location Tolerance Max.	Top Mounting Hole +.003 –.000	Material	Thickness Range	Min.
INCH (in.)	CFSSA	.213	Metal	HRB50	.040	.260	± .005	.156	P-C board or metal	.040-.070	.100
	CFSSS	.213		HRB60	.040	.260	± .005	.156			.100
	CFSSC	.213		HRB70	.040	.260	± .005	.156			.100

Installation & Performance Data

		Bottom Panel (Fixed)			Top Panel (Removable)		
	Series	Sheet Thickness & Sheet Material	Installation (lbs.)	Pushout (lbs.)	Max. first on force (lbs.)	Min. first off force (lbs.)	Min. 15th off force (lbs.)
INCH (in.)	CFSSA	.040 Aluminum HRB 25	1500	200	13	3.0	1.0
	CFSSS	.040 Aluminum HRB 25	1500	200	20	6.0	2.0
	CFSSC	.060 Cold-rolled Steel HRB 64	3600	400	20	6.0	2.0

Installation & Performance Data

		Bottom Panel (Fixed)						Top Panel (Removable)			
	Series	Bottom Mounting Hole +.08 –.00	Material	Hardness Max.	Thickness Min.	Min.	Location Tolerance Max.	Top Mounting Hole +.08 –.00	Material	Thickness Range	Min.
METRIC (mm)	CFSSA	5.4	Metal	HRB50	1	6.6	± .13	4.0	P-C board or metal	1-1.8	2.5
	CFSSS	5.4		HRB60	1	6.6	± .13	4.0			2.5
	CFSSC	5.4		HRB70	1	6.6	± .13	4.0			2.5

Installation & Performance Data

		Bottom Panel (Fixed)			Top Panel (Removable)		
	Series	Sheet Thickness & Sheet Material	Installation (kN)	Pushout (N)	Max. first on force (N)	Min. first off force (N)	Min. 15th off force (N)
METRIC (mm)	CFSSA	1.0 Aluminum HRB 25	6.7	880	44	13	4.0
	CFSSS	1.0 Aluminum HRB 25	6.7	880	89	27	9.0
	CFSSC	1.52 Cold-rolled Steel HRB 64	16	2670	89	27	9.0

Self-Clinching Concealed-Head Standoffs

Series CFHS

NEW

CFHS concealed head standoffs allow permanent mounting in thin metal sheets, using a hollow punch and solid anvil. The standoff is pressed permanently into a blind milled hole, with no marring of the exterior surface.

Series	Material	Finish
CFHS	300 Series Stainless Steel	Passivated ASTM A380

Thread: Internal 2B, ANSI B1.1 (6H ANSI/ASME B1.13M)
Use in: Materials with HRB-70 or less.

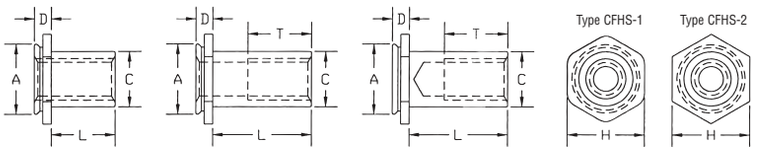

Full Thread A | Partial Thread B | Blind Thread C

Part Number Structure:
CFHS-1-440-4

- Length Code
- Thread Code
- Type Code
- Series

Dimensions & Specifications

	Thread Size	Type Code	Thread Code	L Length +.002 - .005 (in.) .187	.250	.312	.375	.500	.525	.750	1.00	Min. Sheet Thick-ness	Blind Mounting Hole Dia. +.003 -.000	Min. Depth Of Blind Hole	T Min. Depth Full Thread	D Max.	C Max.	A Max.	H Nom.	Min. Dist. Hole C/L To Edge
INCH (in.)	.112-40 (#4-40)	CFHS-1	440	3[A]	4[B]	5[B]	6[B]	8[C]	10[C]	12[C]	16[C]	.062	.213	.043	.188	.041	.165	.212	.250	.188
		CFHS-2										.093		.075		.072				
	.138-32 (#6-32)	CFHS-1	632	3[A]	4[A]	5[B]	6[B]	8[C]	10[C]	12[C]	16[C]	.062	.290	.043	.250	.041	.213	.289	.312	.219
		CFHS-2										.093		.075		.072				
	.164-32 (#8-32)	CFHS-1	832†	3[A]	4[A]	5[B]	6[B]	8[C]	10[C]	12[C]	16[C]	.062	.312	.043	.250	.041	.245	.311	.344	.250
		CFHS-2										.093		.075		.072				
	.190-32 (#10-32)	CFHS-1	1032†	3[A]	4[A]	5[A]	6[A]	8[B]	10[C]	12[C]	16[C]	.062	.344	.043	.375	.041	.290	.343	.375	.281
		CFHS-2										.093		.075		.072				
	.250-20 (1/4-20)	CFHS-2	420†	3[A]	4[A]	5[A]	6[A]	8[B]	10[B]	12[C]	16[C]	.093	.390	.075	.375	.072	.354	.389	.438	.375

	Thread Size	Type Code	Thread Code	L Length +.05 - .13 (mm) 4	6	8	10	12	16	20	25	Min. Sheet Thick-ness	Blind Mounting Hole Dia. +.08 -.00	Min. Depth Of Blind Hole	T Min. Depth Full Thread	D Max.	C Max.	A Max.	H Nom.	Min. Dist. Hole C/L To Edge
METRIC (mm)	M3x0.5	CFHS-1	M3	4[A]	6[A]	8[B]	10[C]	12[C]	16[C]	20[C]	25[C]	1.6	5.41	1.1	5	1.04	4.2	5.39	6.35	4.8
		CFHS-2				8[C]						2.4		1.91		1.83				
	M4x0.7	CFHS-1	M4	4[A]	6[A]	8[B]	10[B]	12[C]	16[C]	20[C]	25[C]	1.6	7.92	1.1	6.5	1.04	6.23	7.9	8.74	6.4
		CFHS-2					10[C]					2.4		1.91		1.83				
	M5x0.8	CFHS-1	M5†	4[A]	6[A]	8[B]	10[B]	12[B]	16[C]	20[C]	25[C]	1.6	8.74	1.1	9.6	1.04	7.37	8.72	9.53	7.2
		CFHS-2										2.4		1.91		1.83				
	M6x1	CFHS-2	M6†	4[A]	6[A]	8[A]	10[B]	12[B]	16[C]	20[C]	25[C]	2.4	9.9	1.91	9.6	1.83	9	9.89	11.11	9.5

†Not stocked, available on special order.

Continued on next page.

Self-Clinching Concealed-Head Standoffs

Series CFHS

Continued from previous page.

Installation & Performance Data

	Type Code	Thread Code	Tightening Torque Max (in.-lbs.)	Test Sheet Material: Cold-rolled Steel Installation Force (lbs.)	Cold-rolled Steel Pullout (lbs.)	5052-H34 Aluminum Installation Force (lbs.)	5052-H34 Aluminum Pullout (lbs.)
INCH (in.)	CFHS-1	440	4.75	4000	300	2000	200
		632	8.75	4500	350	3000	240
		832	18	4800	400	4000	270
		1032	32	5500	450	5000	290
	CFHS-2	440	3.8	4300	330	2900	220
		632	7	5000	360	3200	240
		832	14.4	5300	440	4000	300
		1032	25.6	6000	600	5000	400
		420	64	6500	650	5500	430

Installation & Performance Data

	Type Code	Thread Code	Tightening Torque Max (N•m)	Test Sheet Material: Cold-rolled Steel Installation Force (kN)	Cold-rolled Steel Pullout (N)	5052-H34 Aluminum Installation Force (kN)	5052-H34 Aluminum Pullout (N)
METRIC (mm)	CFHS-1	M3	.55	17.8	1330	12.5	890
		M4	2	21.3	1775	17.8	1200
		M5	3.6	24.5	2000	22.2	1290
	CFHS-2	M3	.44	19.2	1465	12.9	975
		M4	1.6	23.6	1955	17.8	1335
		M5	2.9	26.7	2665	22.2	1775
		M6	7.2	28.9	2860	24.4	1915

Self-Clinching Concealed-Head Standoffs

Series CFHS
Typical Installation Method

Continued from previous page.

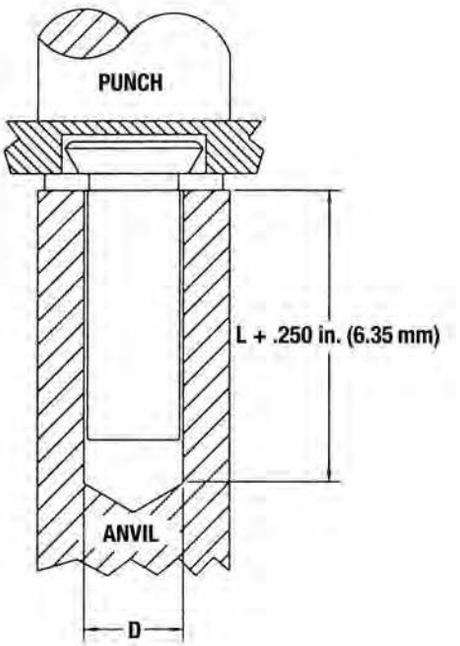

Installation Procedure

1. Mill a blind hole in material to specified depth.
2. Place fastener into hole in anvil.
3. Place sheet material over head of fastener.
4. Apply a downward squeezing force with punch, pressing on sheet material until serrated collar of fastener is flush with surface.

*Depth of blind holes may be greater than minimum, if sheet thickness allows.

Anvil 'D' Diameter Dimensions for Concealed Head Studs

	Series	Thread Code	D Dia. (in.)
INCH (in.)	CFHS	440	.170
		632	.218
		832	.250
		1032	.295
		420	.358

	Series	Thread Code	D Dia. (mm)
METRIC (mm)	CFHS	M3	4.33
		M4	6.36
		M5	7.5
		M6	9.13

Weld Nuts

Series CFWN & CFWNS

CFWN weld nuts are the solution to providing load bearing threads in sheets that are too thin to tap. They provide three-point projections for fast, easy welding. Captive Fastener weld nuts self align into standard hole sizes, and are dimensionally identical to industry standards. The alignment collar orients the weld nut and prevents weld spatter from entering thread area.

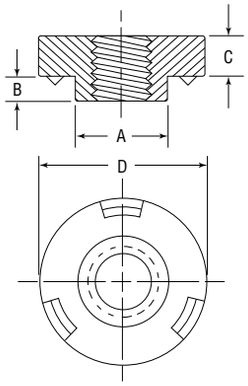

Series	Material	Finish
CFWN	Carbon Steel	Light Oil Coat (Copper Flash Optional)
CFWNS	300 Series Stainless Steel	Passivated ASTM A380

Thread: Internal 2B, ANSI B1.1 (6H, ANSI/ASME B1.13M).

Part Number Structure:

CFWN 632-1

- Sheet Thickness
- Thread Code
- Series

Dimensions & Specifications

	Thread Size	Part Number: Carbon Steel	Part Number: Stainless Steel	Min.	+.004 in. (+.10 mm) –.000(.00)	A Max.	B Max.	C ± .004 in. (± .10 mm)	D +.000 in. (+.00 mm) –.010 in. (–.25 mm)	Min.
INCH (in.)	#4-40	CFWN440	CFWNS440	.030	.173	.172	.030	.063	.310	.15
	#6-32	CFWN632	CFWNS632	.030	.193	.191	.030	.093	.340	.17
		CFWN632-1	N/A	.060	.193	.191	.050			
	#8-32	CFWN832	CFWNS832	.030	.218	.216	.030	.107	.370	.18
		CFWN832-1	N/A	.060	.218	.216	.050			
	#10-24	CFWN1024	CFWNS1024	.030	.250	.248	.030	.155	.440	.22
		CFWN1024-1	N/A	.060	.250	.248	.050			
	#10-32	CFWN1032	CFWNS1032	.030	.250	.248	.030	.155	.440	.22
		CFWN1032-1	N/A	.060	.250	.248	.050			
	1/4-20	CFWN420	CFWNS420	.050	.316	.315	.048	.185	.520	.26
METRIC (mm)	M3 x 0.5	CFWNM3	CFWNSM3	.77	4.4	4.36	.77	1.5	7.95	4.5
	M4 x 0.7	CFWNM4	CFWNSM4	.77	5.6	5.57	.77	2.6	9.4	5.2
	M5 x 0.8	CFWNM5	CFWNSM5	.77	6.4	6.33	.77	3.8	11.1	5.7
	M6 x 1.0	CFWNM6	CFWNSM6	1.25	8.1	8.03	1.24	4.6	13.2	6.7

N/A = Not Available

Continued on next page.

Weld Nuts

Series CFWN & CFWNS

Continued from previous page.

Performance Data

	Series	Thread Size	Cold-Rolled Steel .060 in. (1.5 mm) Pushout (lbs.)	Cold-Rolled Steel .060 in. (1.5 mm) Torque-Out (in.-lbs.)	300 Series Stainless Steel .060 in. (1.5mm) Pushout (lbs.)	300 Series Stainless Steel .060 in. (1.5mm) Torque-Out (in.-lbs.)
INCH (in.)	CFWN	#4-40	500	13	N/A	N/A
		#6-32	640	22		
		#8-32	760	33		
		#10-32	880	56		
		1/4-20	1000	185		
	CFWNS	#4-40	N/A	N/A	680	13
		#6-32			800	28
		#8-32			850	45
		#10-32			900	110
		1/4-20			1000	200
METRIC (mm)	CFWN	Thread Size	Pushout (N)	Torque-Out (N•m)	Pushout (N)	Torque-Out (N•m)
		M3	2220	1.4	N/A	N/A
		M4	3380	3.7		
		M5	3910	6.3		
		M6	4445	20.9		
	CFWNS	M3	N/A	N/A	3020	1.4
		M4			3780	5
		M5			4000	12.4
		M6			4445	22.5

Installation Data

	Series	Thread Size	Sheet Material .030 in. (.077mm) to .063 in. (1.6mm) Cold Rolled Steel Electrode Ram Force (lbs.)	Cold Rolled Steel Secondary Current Amps ± 500	Cold Rolled Steel Weld Time Cycles/Sec.	300 Series Stainless Steel Electrode Ram Force (lbs.)	300 Series Stainless Steel Secondary Current Amps ± 500	300 Series Stainless Steel Weld Time Cycles/Sec.
INCH (in.)	CFWN	#4-40	450-500	17,000	6/0.10	N/A	N/A	N/A
		#6-32	450-500	17,000	6/0.10			
		#8-32	450-500	17,000	6/0.10			
		#10-32	500-550	18,000	10/0.17			
		1/4-20	550-600	20,000	10/0.17			
	CFWNS	#4-40	N/A	N/A	N/A	450-500	16,500	6/0.10
		#6-32				450-500	16,500	6/0.10
		#8-32				500-550	16,500	6/0.10
		#10-32				550-600	18,500	6/0.10
		1/4-20				650-700	20,000	6/0.10
METRIC (mm)	CFWN	Thread Size	Electrode Ram Force (N)	Secondary Current Amps ± 500	Weld Time Cycles/Sec.	Electrode Ram Force (N)	Secondary Current Amps ± 500	Weld Time Cycles/Sec.
		M3	2000-2200	17,000	6/0.10	N/A	N/A	N/A
		M4	2000-2200	17,000	6/0.10			
		M5	2220-2440	18,000	10/0.17			
		M6	2440-2670	20,000	10/0.17			
	CFWNS	M3	N/A	N/A	N/A	2000-2220	16,500	6/0.10
		M4				2220-2225	16,500	6/0.10
		M5				2440-2670	18,500	6/0.10
		M6				2890-3110	20,000	6/0.10

TECHNIQUES FOR BETTER WELDING

Be sure the electrodes, sheet material and weld nuts themselves are clean and contain no grease, rust or burrs. If installed welds look good, but pushout performance is poor, check for the following causes:

- Electrode force too high
- Low current level
- Dirty panel
- Nuts not centered
- Hold time too short, causing insufficient cooling
- Inconsistent pressure regulator

If threads are distorted after installation, check for the following causes:

- Long weld time
- High current level
- Electrode force too high

INSTALLATION TIPS

Electrode force is the pressure applied by electrodes on the weld nut and sheet material to squeeze them together and make good contact.

Low electrode force may cause discoloration, flashing, burning or spatter.

High electrode force may compress weld projections before correct temperature is achieved or push projections of the unheated weld nut into the sheet.

Secondary current setting controls the heat applied to the Captive weld nut and sheet material.

N/A = Not Available

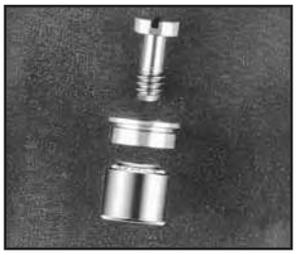

Flush-Mounted Panel Screw Components

Series CFS2, CFR2 & CFN2

CFS2, CFR2 & CFN2 Panel Screw Components remain captive to panel and frame when unassembled. Panel Screws are designed to be flush in sheets as thin as .125 in. (3.2 mm.)

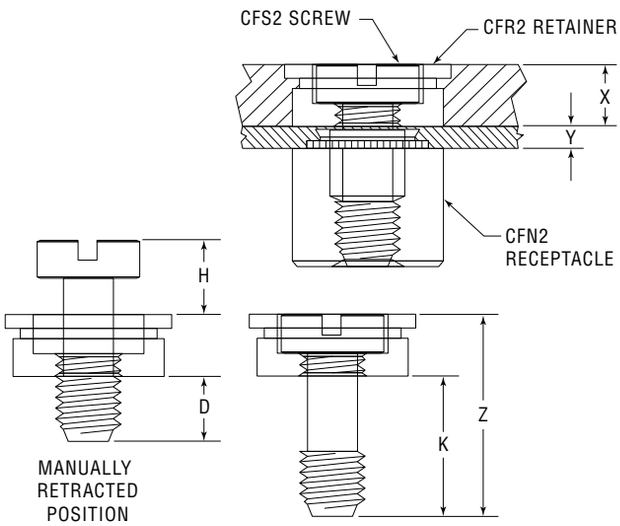

Series	Material	Finish
CFS2	300 Series Stainless Steel	Passivated ASTM A380
CFR2	300 Series Stainless Steel	Passivated ASTM A380
CFN2	Heat-treated Carbon Steel	Zinc* Clear

*See Finish Spec. on Page 6.

Threads:

CFS2 - External 2A, ANSI B1.1 (6g, ANSI/ASME B1.13M)
CFR2 - Internal 2B, ANSI B1.1 (6H, ANSI/ASME B1.13M)
CFN2 - Internal 2B, ANSI B1.1 (6H, ANSI/ASME B1.13M)

Use in: materials of HRB 70 or less.

Dimensions & Specifications

	Y Min.	X Nom.	Z ± .010	H	K	D Nom.
INCH (in.)	.04	.125	.40	.16	.28	.13

Dimensions & Specifications

	Y Min.	X Nom.	Z ± .25	H	K	D Nom.
METRIC (mm)	1.0	3.18	10.3	3.8	7.2	3.3

Alternate Attachment Method:

When thin panel material makes it necessary for the screw head to remain above the top panel surface, CFS2 Screws may be used with CFL Flush Nuts as retainers. CFL nuts self-clinch into sheets as thin as .060 in. (1.5 mm) and remain flush on both sides of the panel. CFS2 Screws are rotated through the threads of the CFL Retainers to install and captivate. Refer to CFL section for dimensions and installation data.

	P Max.	A	B	D Nom.
INCH (in.) CFS2 w/CFL Retainer	.060	.075	.210	.130
METRIC (mm) CFS2 w/CFL Retainer	1.50	1.90	5.40	3.30

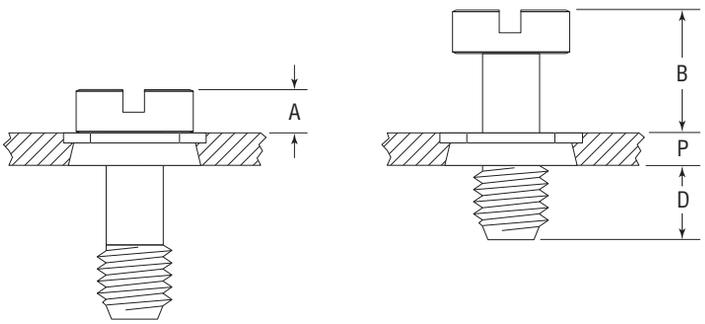

Continued on next page.

Flush-Mounted Panel Screw Components

Series CFS2, CFR2 & CFN2

Continued from previous page.

Series CFS2 Flush-Mounted Screw

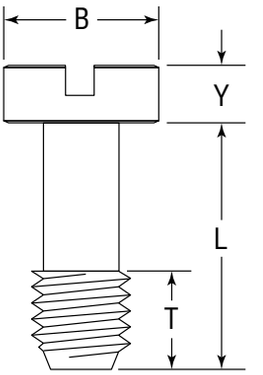

Part Number Structure:
CFS2 440-40
- Screw Length
- Thread Code
- Series

Dimensions & Specifications

INCH (in.)	Thread Size	Series	Thread Code	Screw Length Code	B Nom.	Y +.002 -.006	L ±.010	T Nom.
	#4-40	CFS2	440	40	.18	.075	.33	.13
	#6-32	CFS2	632	40	.21	.075	.33	.13
	#8-32	CFS2	832	40	.25	.075	.33	.13
	#10-32	CFS2	1032	40	.28	.075	.33	.13

Dimensions & Specifications

METRIC (mm)	Thread Size	Series	Thread Code	Screw Length Code	B Nom.	Y +.05 -.15	L ±.25	T Nom.
	M3 x 0.5	CFS2	M3	40	4.7	1.9	8.3	3.3
	M4 x 0.7	CFS2	M4	40	6.3	1.9	8.3	3.3
	M5 x 0.8	CFS2	M5	40	7.1	1.9	8.3	3.3

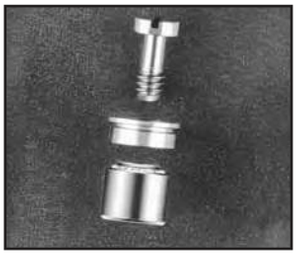

Flush-Mounted Panel Screw Components

Series CFS2, CFR2 & CFN2

Continued from previous page.

Series CFR2 Flush-Mounted Retainer

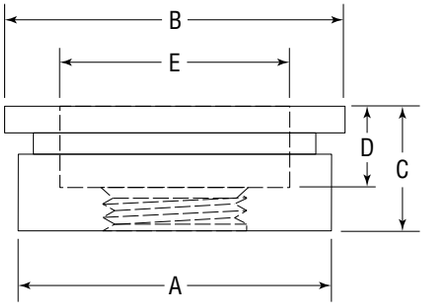

Part Number Structure:

CFR2 440

- 440 → Thread Code
- CFR2 → Series

Dimensions & Specifications

	Thread Size	Series	Thread Code	C Max.	Min. Self-clinching	Min. Flush Install.	+.003 -.000	E Nom.	A Max.	B Nom.	D Nom.	Min.
INCH (in.)	#4-40	CFR2	440	.125	.050	.125	.281	.195	.280	.310	.075	.310
	#6-32	CFR2	632	.125	.050	.125	.312	.225	.311	.340	.075	.330
	#8-32	CFR2	832	.125	.050	.125	.344	.255	.343	.370	.075	.340
	#10-32	CFR2	1032	.125	.050	.125	.375	.290	.374	.410	.075	.360

Dimensions & Specifications

	Thread Size	Series	Thread Code	C Max.	Min. Self-clinching	Min. Flush Install.	+.08 -.00	E Nom.	A Max.	B Nom.	D Nom.	Min.
METRIC (mm)	M3 x 0.5	CFR2	M3	3.18	1.27	3.18	7.14	4.95	7.12	7.87	1.91	7.87
	M4 x 0.7	CFR2	M4	3.18	1.27	3.18	8.74	6.48	8.72	9.53	1.91	8.64
	M5 x 0.8	CFR2	M5	3.18	1.27	3.18	9.53	7.37	9.50	10.41	1.91	9.14

Flush-Mounted Panel Screw Components

Series CFS2, CFR2 & CFN2

Continued from previous page.

Series CFN2 Self-Clinching Nut

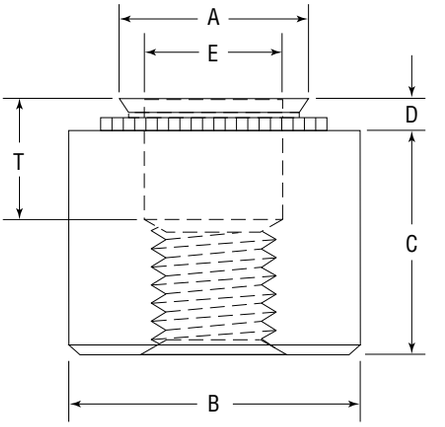

Part Number Structure:

CFN2 440-1

- Shank Code
- Thread Code
- Series

Dimensions & Specifications

INCH (in.)	Thread Size	Series	Thread Code	Shank Code	D Max.	Min.	+.003 -.000	A Max.	B Nom.	T ±.010	E Nom.	C ±.005	Min.
	#4-40	CFN2	440	1	.038	.040	.187	.186	.280	.130	.126	.240	.220
	#6-32	CFN2	632	1	.038	.040	.213	.212	.310	.130	.156	.240	.270
	#8-32	CFN2	832	1	.038	.040	.250	.249	.340	.130	.187	.240	.280
	#10-32	CFN2	1032	1	.038	.040	.277	.276	.370	.130	.213	.240	.310

Dimensions & Specifications

METRIC (mm)	Thread Size	Series	Thread Code	Shank Code	D Max.	Min.	+.08 -.00	A Max.	B Nom.	T ±.25	E Nom.	C ±.13	Min.
	M3 x 0.5	CFN2	M3	1	.97	1.00	4.75	4.73	7.10	3.30	3.20	6.00	7.90
	M4 x 0.7	CFN2	M4	1	.97	1.00	6.40	6.38	8.70	3.30	4.75	6.00	8.70
	M5 x 0.8	CFN2	M5	1	.97	1.00	7.00	6.96	9.50	3.30	5.41	6.00	9.20

Self-Clinching Plungers

Series CPN & CPR

CPN & CPR Spring-Loaded Plunger Assemblies are used as positioning pins and locking stops on drawer slides and equipment consoles. CPR series has a hold open feature activated by pulling out the plunger head and rotating it, which allows smooth slide operation.

Series	Material	Finish	Feature
CPN	Carbon Steel	Bright Nickel over Copper Flash ASTM B689	Spring Return
CPR			Hold Open

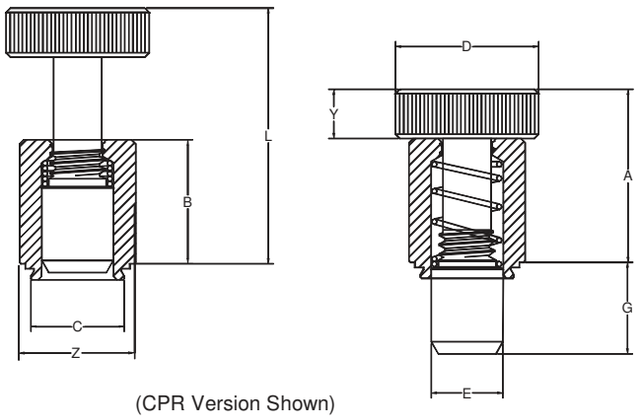

(CPR Version Shown)

Use in: Cold-rolled Steel or 5052-H34 Aluminum with Rockwell Hardness of HRB-80 or less.

Part Number Structure:

CPN - 04 - 4

- Length Code
- Diameter Code
- Series

Dimensions & Specifications

INCH (in.) Series	Plunger Diameter	Plunger Length	A ±.010	B ±.005	C Max.	D ±.010	E +.000 -.005	G ±.010	L Nom.	Y ±.010	Z ±.010	Min.	+.003 -.000	Min.
CPR	04	4	.595	.430	.327	.50	.250	.310	.895	.17	.406	.060	.328	.34
CPN*	04	4	.510	.350	.327	.50	.250	.310	.780	.17	.406	.060	.328	.34

METRIC (mm) Series	Plunger Diameter	Plunger Length	A ±.25	B ±.13	C Max.	D ±.25	E +.00 -.13	G ±.25	L Nom.	Y ±.25	Z ±.25	Min.	+.08 -.00	Min.
CPR	04	4	15.11	10.92	8.31	12.7	6.35	7.87	22.73	4.32	10.3	1.53	8.33	8.64
CPN*	04	4	12.95	8.89	8.31	12.7	6.35	7.87	19.81	4.32	10.3	1.53	8.33	8.64

*Available on special order.

Self-Clinching Plungers

Series CPN & CPR

Continued from previous page.

Installation & Performance Data

		Cold Rolled Steel		Aluminum	
	Series	Installation Force (lbs.)	Pushout (lbs.)	Installation Force (lbs.)	Pushout (lbs.)
INCH (in.)	CPN CPR	4000	500	3000	400
	Series	Installation Force (kN)	Pushout (N)	Installation Force (kN)	Pushout (N)
METRIC (mm)	CPN CPR	17.79	2224	13.35	1779

Recommended Installation Procedure

To achieve the correct installation results for Captive self-clinching fasteners, please follow the 11 simple rules listed below:

DO:

1. Provide the properly sized mounting hole for each fastener.
2. Place fastener in hole on punched side of panel.
3. Be sure the fastener shank or pilot is squarely within the hole before pressure is applied.
4. Apply a steady squeezing force between press and anvil.
5. Use sufficient force to embed the clinching ring around its entire circumference.

DO NOT:

6. Do not install steel and stainless fasteners in aluminum before the panels have been anodized.
7. Do not deburr mounting holes, as the rough metal is used to help clinch the fastener into the sheet.
8. Do not install the fastener closer to the edge of the sheet than specified in the dimension table for the fastener in use.
9. Do not over squeeze, as this may flatten the fastener head, distort the thread and buckle the panel.
10. Do not install fastener with a hammer blow; doing so does not allow sufficient time for the sheet metal to flow into the clinching profile. A squeezing force is required for optimum performance.
11. Do not install the screw in the head side of the fastener, but from the opposite side, which directs the load toward the sheet.

NOTES:

1. All installation, pushout and torque-out force references are nominal, based on recommended installation specifications and procedures. Differences in mounting hole dimensions, sheet material and installation methods may alter this data. Testing the performance of this product in application is suggested. Samples are available for this purpose upon request.
2. Dimensional and performance characteristics are subject to change without notice.

NUTS

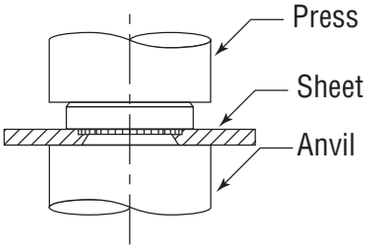

STANDOFFS

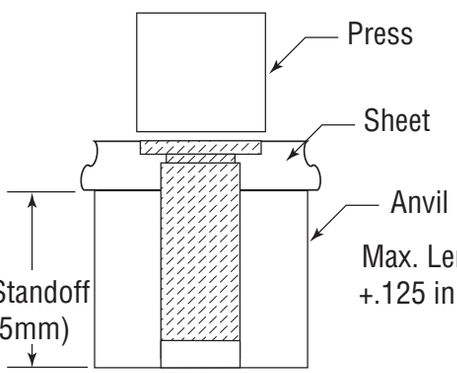

STUDS

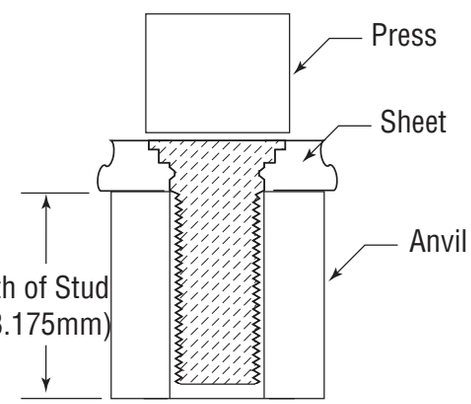

Sheet Metal Conversion Chart

Inch (in.)

Gage No.	Steel	Stainless Steel	Aluminum
7	0.179		
8	0.164	0.172	
9	0.150	0.156	
10	0.135	0.141	
11	0.120	0.125	
12	0.105	0.109	
13	0.090	0.094	0.072
14	0.075	0.078	0.064
15	0.067	0.070	0.057
16	0.060	0.063	0.051
17	0.054	0.056	0.045
18	0.048	0.050	0.040
19	0.042	0.044	0.036
20	0.036	0.038	0.032
21	0.033	0.034	0.028
22	0.030	0.031	0.025
23	0.027	0.028	0.023
24	0.024	0.025	0.020
25	0.021	0.022	0.018
26	0.018	0.019	0.017
27	0.016	0.017	0.014
28	0.015	0.016	
29	0.014	0.014	
30	0.012	0.013	
31		0.011	

Metric (mm)

Gage No.	Steel	Stainless Steel	Aluminum
7	4.55		
8	4.17	4.37	
9	3.81	3.96	
10	3.43	3.58	
11	3.05	3.18	
12	2.67	2.77	
13	2.29	2.39	1.83
14	1.91	1.98	1.63
15	1.70	1.78	1.45
16	1.52	1.60	1.30
17	1.37	1.42	1.14
18	1.22	1.27	1.02
19	1.07	1.12	0.91
20	0.91	0.97	0.81
21	0.84	0.86	0.71
22	0.76	0.79	0.64
23	0.69	0.71	0.58
24	0.61	0.64	0.51
25	0.53	0.56	0.46
26	0.46	0.48	0.43
27	0.41	0.43	0.36
28	0.38	0.41	
29	0.36	0.36	
30	0.30	0.33	
31		0.28	

Inch – Metric Conversion Table

Characteristic	When You Know	Multiply By	To Find	When You Know	Multiply By	To Find
Length	Inches	25.4	Millimeters (mm)	Millimeters (mm)	0.03937	Inches
Area	Square Inches	645.16	Square Millimeters	Square Millimeters	0.00155	Square inches
Plating Thickness	Inches	25400	µm	µm	3.937×10^{-5}	Inches
Force	Pounds	4.448	Newtons (N)	Newtons (N)	0.2248	Pounds
Torque	Inch-pounds	0.113	Newton-meters (N•m)	Newton-meters (N•m)	8.851	Inch-pounds
Stress	PSI	0.006895	MPa	MPa	145.04	PSI
Stress	KSI	6.895	MPa	MPa	0.14504	KSI

Galvanic Corrosion Chart

Galvanic Corrosion is a concern when selecting a fastener to be used in a panel of dissimilar metal, especially when it will be subjected to moisture or water. Ideally, the fastener should be the more noble metal and the panel the less noble metal, to reduce the effects of corrosion. Generally, metals close to one another on the chart will not have a strong effect on one another. However, the further apart the materials are on the chart, the stronger the corrosion effect will be on the least noble metal. Therefore, since the fastener is the smaller element, it needs to be made of the more noble metal so it will not be attacked. The larger panel can be of the less noble metal, where corrosion will not affect the larger surface as readily.

Anodic
(Least Noble)
Corroded

Magnesium
Magnesium Alloys
Zinc
Beryllium
Aluminum 1100, 3003, 3004, 5052, 6053
Cadmium
Aluminum 2017, 2024, 2117
Mild Steel 1018, Wrought Iron
HSLA Steel, Cast Iron
Chrome Iron (active)
430 Stainless (active)
302, 303, 321, 347, 410, 416 Stainless Steel(active)
Ni-Resist
316, 317 Stainless (active)
Carpenter 20Cb-3 Stainless (active)
Aluminum Bronze (CA687)
Hastelloy C(active) Inconel 625(active) Titanium(active)
Lead/Tin Solder
Lead
Tin
Inconel 600 (active)
Nickel (active)
60% Ni 15% Cr (active)
80% Ni 20% Cr (active)
Hastelloy B (active)
Naval Brass (CA464), Yellow Brass (CA268)
Red Brass (CA230), Admiralty Brass (CA443)
Copper (CA102)
Manganese Bronze(CA675), Tin Bronze(CA903, 905)
410, 416 Stainless(passive) Phosphor Bronze(CA521, 524)
Silicon Bronze (CA651, 655)
Nickel Silver (CA 732, 735, 745, 752, 754, 757, 765, 770, 794
Cupro Nickel 90-10
Cupro Nickel 80-20
430 Stainless (passive)
Cupro Nickel 70-30
Nickel Aluminum Bronze (CA630, 632)
Monel 400, K500
Silver Solder
Nickel (passive)
60% Ni 15% Cr (passive)
Iconel 600 (passive)
80% Ni 20% Cr (passive)
Chrome Iron (passive)
302, 303, 304, 321, 347 Stainless (passive)
316, 317 Stainless (passive)
Carpenter 20Cb-3 Stainless (passive), Incoloy 825 (passive)
Silver
Titanium (passive), Hastelloy C & C276 (passive)
Graphite
Zirconium
Gold
Platinum

DIRECTION OF ATTACK

Cathodic
(Most Noble)
Protected

Part Number Cross Reference Chart

CAPTIVE FASTENER® SERIES	PEM® SERIES	PAGE
CFAS, CFAC	AS, AC	9-10
CFFS, CFFC	LAS, LAC	11-12
CFSP	SP	13-14
CFB, CFBS	B, BS	15-16
C / CS CFH, CFHN CA	S,SS / CLS, CLSS H, HN CLA	17-21 22 23
CKN	-	24
CFL	F	25-26
CFE, CFEO CFEX, CFEOX	FE, FEO FEX, FEOX	27-28
CRT	LK	29-30
CPL, CPLC	PL, PLC	31-32
CH, CHS, CHA	FH, FHS, FHA	33-35
HCH, HCHS, HCHB	HFH, HFHS, HFHB	36-37
HCW	HFE	38-39
TCH, TCHS	TFH, TFHS	40-41
CHE, CHES	FHL, FHLS	42-44
CHTS	FH4	45-47
CFA-1, CFA-2 / CFC-1, CFC-2	CHA, CFHA / CHC, CFHC	48-50
CH, CHN, CHS, CHA	FH, FHN, FHS, FHA	51-52
CGS	TPS	53
CKF2, CKFS2 CKFE, CKFSE CKFH CKFB3	KF2, KFS2 KFE, KFSE KFH KFB3	54-55 56 57 58
CRM	SMTSO	59
CFKSSB	KSSB	60-61
CPFK LPH-0, 1, 2 CPFC2	PFK PF30, 31, 32 PFC2	62 63-64 65-66
CFSO, CFSOS, CFSOA CFBSO, CFBSOS, CFBSOA	SO, SOS, SOA BSO, BSOS, BSOA	67-73
CFSOSG, CFSOAG	SOSG, SOAG	74
CF40, CF40S	DSO, DSOS	75-76
CF4-SO, CF4-BSO	S04, BS04	77-79
CFSKC	SKC	80-81
CFMS	-	82
CFSO, CFSOS, CFSOA	SO, SOS, SOA	83-84
CFT, CFTS, CFTA	TSO, TSOS, TSOA	85-87
CFSSA, CFSSS, CFSSC	SSA, SSS, SSC	88-89
CFHS-1, CFHS-2	CSS, CSOS	90-92
CFWN, CFWNS	WN, WNS	93-94
CFS2, CFR2, CFN2	PS10, PR10, N10	95-98
CPN, CPR	PSL2, PTL2	99-100

"PEM" is a registered trademark of PennEngineering®

Conversion Chart

Inch & Metric

mm	Decimals	Fractions
0.1	.0039	
0.2	.0079	
0.3	.0118	
0.397	.0156	1/64
0.4	.0157	
0.5	.0197	
0.6	.0236	
0.7	.0276	
0.794	.0313	1/32
0.8	.0315	
0.9	.0354	
1.0	.0394	
1.1	.0433	
1.191	.0469	3/64
1.2	.0472	
1.3	.0512	
1.4	.0551	
1.5	.0591	
1.588	.0625	1/16
1.6	.0630	
1.7	.0669	
1.8	.0709	
1.9	.0748	
1.984	.0781	5/64
2.0	.0787	
2.1	.0827	
2.2	.0866	
2.3	.0906	
2.381	.0938	3/32
2.4	.0945	
2.5	.0984	
2.6	.1024	
2.7	.1063	
2.778	.1094	7/64
2.8	.1102	
2.9	.1142	
3.0	.1181	
3.1	.1220	
3.175	.1250	1/8
3.2	.1260	
3.3	.1299	
3.4	.1339	
3.5	.1378	
3.572	.1406	9/64
3.6	.1417	
3.7	.1457	
3.8	.1496	
3.9	.1535	
3.969	.1563	5/32
4.0	.1575	
4.1	.1614	
4.2	.1654	
4.3	.1693	
4.366	.1719	11/64
4.4	.1732	
4.5	.1772	
4.6	.1811	
4.7	.1850	
4.763	.1875	3/16
4.8	.1890	
4.9	.1929	
5.0	.1969	
5.1	.2008	
5.159	.2031	13/64

mm	Decimals	Fractions
5.2	.2047	
5.3	.2087	
5.4	.2126	
5.5	.2165	
5.556	.2188	7/32
5.6	.2205	
5.7	.2244	
5.8	.2283	
5.9	.2323	
5.953	.2344	15/64
6.0	.2362	
6.1	.2402	
6.2	.2441	
6.3	.2480	
6.350	.2500	1/4
6.4	.2520	
6.5	.2559	
6.6	.2598	
6.7	.2638	
6.747	.2656	17/64
6.8	.2677	
6.9	.2717	
7.0	.2756	
7.1	.2795	
7.144	.2813	9/32
7.2	.2835	
7.3	.2874	
7.4	.2913	
7.5	.2953	
7.541	.2969	19/64
7.6	.2992	
7.7	.3031	
7.8	.3071	
7.9	.3110	
7.938	.3125	5/16
8.0	.3150	
8.1	.3189	
8.2	.3228	
8.3	.3268	
8.334	.3281	21/64
8.4	.3307	
8.5	.3346	
8.6	.3386	
8.7	.3425	
8.731	.3438	11/32
8.8	.3465	
8.9	.3504	
9.0	.3543	
9.1	.3583	
9.128	.3594	23/64
9.2	.3622	
9.3	.3661	
9.4	.3701	
9.5	.3740	
9.525	.3750	3/8
9.6	.3780	
9.7	.3819	
9.8	.3858	
9.9	.3898	
9.922	.3906	25/64
10.0	.3937	
10.1	.3976	
10.2	.4016	
10.3	.4055	

mm	Decimals	Fractions
10.319	.4063	13/32
10.4	.4094	
10.5	.4134	
10.6	.4173	
10.7	.4213	
10.716	.4219	27/64
10.8	.4252	
10.9	.4291	
11.0	.4331	
11.1	.4370	
11.113	.4375	7/16
11.2	.4409	
11.3	.4449	
11.4	.4488	
11.5	.4528	
11.509	.4531	29/64
11.6	.4567	
11.7	.4606	
11.8	.4646	
11.9	.4685	
11.906	.4688	15/32
12.0	.4724	
12.1	.4764	
12.2	.4803	
12.3	.4843	
12.303	.4844	31/64
12.4	.4882	
12.5	.4921	
12.6	.4961	
12.700	.5000	1/2
12.8	.5039	
12.9	.5079	
13.0	.5118	
13.097	.5156	33/64
13.1	.5157	
13.2	.5197	
13.3	.5236	
13.4	.5276	
13.494	.5313	17/32
13.5	.5315	
13.6	.5354	
13.7	.5394	
13.8	.5433	
13.891	.5469	35/64
13.9	.5472	
14.0	.5512	
14.1	.5551	
14.2	.5591	
14.288	.5625	9/16
14.3	.5630	
14.4	.5669	
14.5	.5709	
14.6	.5748	
14.684	.5781	37/64
14.7	.5787	
14.8	.5827	
14.9	.5866	
15.0	.5906	
15.081	.5938	19/32
15.1	.5945	
15.2	.5984	
15.3	.6024	
15.4	.6063	
15.478	.6094	39/64

mm	Decimals	Fractions
15.5	.6102	
15.6	.6142	
15.7	.6181	
15.8	.6220	
15.875	.6250	5/8
15.9	.6260	
16.0	.6299	
16.1	.6339	
16.2	.6378	
16.272	.6406	41/64
16.3	.6417	
16.4	.6457	
16.5	.6496	
16.6	.6535	
16.669	.6563	21/32
16.7	.6575	
16.8	.6614	
16.9	.6654	
17.0	.6693	
17.066	.6719	43/64
17.1	.6732	
17.2	.6772	
17.3	.6811	
17.4	.6850	
17.463	.6875	11/16
17.5	.6890	
17.6	.6929	
17.7	.6968	
17.8	.7008	
17.859	.7031	45/64
17.9	.7047	
18.0	.7087	
18.1	.7126	
18.2	.7165	
18.256	.7188	23/32
18.3	.7205	
18.4	.7244	
18.5	.7283	
18.6	.7323	
18.653	.7344	47/64
18.7	.7362	
18.8	.7402	
18.9	.7441	
19.0	.7480	
19.050	.7500	3/4
19.1	.7520	
19.2	.7559	
19.3	.7598	
19.4	.7638	
19.447	.7656	49/64
19.5	.7677	
19.6	.7717	
19.7	.7756	
19.8	.7795	
19.844	.7813	25/32
19.9	.7835	
20.0	.7874	
20.1	.7913	
20.2	.7953	
20.241	.7969	51/64
20.3	.7992	
20.4	.8031	
20.5	.8071	
20.6	.8110	

mm	Decimals	Fractions
20.638	.8125	13/16
20.7	.8150	
20.8	.8189	
20.9	.8228	
21.0	.8268	
21.034	.8281	53/64
21.1	.8307	
21.2	.8346	
21.3	.8386	
21.4	.8425	
21.431	.8438	27/32
21.5	.8465	
21.6	.8504	
21.7	.8543	
21.8	.8583	
21.828	.8594	55/64
21.9	.8622	
22.0	.8661	
22.1	.8701	
22.2	.8740	
22.225	.8750	7/8
22.3	.8780	
22.4	.8819	
22.5	.8858	
22.6	.8898	
22.622	.8906	57/64
22.7	.8937	
22.8	.8976	
22.9	.9016	
23.0	.9055	
23.019	.9063	29/32
23.1	.9094	
23.2	.9134	
23.3	.9173	
23.4	.9213	
23.416	.9219	59/64
23.5	.9252	
23.6	.9291	
23.7	.9331	
23.8	.9370	
23.813	.9375	15/16
23.9	.9409	
24.0	.9449	
24.1	.9488	
24.2	.9528	
24.209	.9531	61/64
24.3	.9567	
24.4	.9606	
24.5	.9646	
24.6	.9685	
24.606	.9688	31/32
24.7	.9724	
24.8	.9764	
24.9	.9803	
25.0	.9843	
25.003	.9844	63/64
25.1	.9882	
25.2	.9921	
25.3	.9961	
25.400	1.0000	1